NOY

Part of Atlas Copco Group

Helium Mass Spectrometer Leak Detector Operation Manual

MODELS: NHJ400 NHJ400M

NHJ480 NHJ600

NHJ800

Version: N2.5 /2025.11

NHJ series Helium Mass Spectrometer Leak Detector

Fig.1 NHJ480

Fig.2 NHJ600

Fig.3 NHJ400M

Fig.4 NHJ400

Explain

The content of this manual will not be notified separately when modified.

This manual is copyrighted by Anhui Nuoyi Technology Co., Ltd. Without our permission, photocopying, duplicating, uploading to the Internet or translating into other languages and other means of communication of all or part of the contents of this manual are illegal, and our company reserves the right to pursue legal responsibility for such acts.

Version：N2.5 /2025.11

Contents

Explain *4*

Section 1 About this Manual *7*

1. User Notice 7
2. Icon agreement 7

Section 2 Security Information *9*

1. Explanation 9
2. Operation Condition 9
3. Danger 1 0

Section 3 Product Description *1 2*

1. Introduction 1 2
2. Instrument construction 1 3

2.1 Overall dimensions 1 3

2.2 Gas Circuit Diagram 1 4

2.3 External Control Output Signal Interface 1 5

3. Technical parameters 1 7

Section 4 Installation of Leak Detector *2 0*

1. Installation requirements 2 0

1.1 Location of leak detector 2 0

1.2 Working power supply of leak detector 2 0

1.3 Mechanical pump oil level 2 0

2. Installation 2 1

Section 5 Operation *2 2*

1. Operation panel 2 2
2. Preparation before startup 23
3. Start up 23
4. Standby mode 2 5
5. Parameter setting 2 6
6. Measurement 4 2
7. Main interface display 4 3
8. Status interface 4 4

Section 6 Calibration process *4 6*

1. External calibration 46
2. Internal calibration 51
3. Sniffer calibration 51
Section 7 Common leak detection methods 53
1. Negative pressure detection 53
2. Positive pressure detection 54
3. Back pressure method 55
Section 8 Maintenance and upkeep of instruments 56
1. Power on test 56
2. Molecular pump maintenance 56
3. Maintenance of vacuum pipelines 56
4. Maintenance of mechanical pumps 58
5. Standard maintenance spare parts list 60
6. Common fault analysis and handling 61
7. Analysis and Handling of Common Errors and Warning Codes..... 63
Section 9 Communication Protocol 68
Section 10 Services 71
1. Installation service 71
2. After sales service 71
3. Contact Information 71

Section 1 About this Manual

1. User Notice

Thank you for choosing to use our company's "NHJ" series helium mass spectrometer leak detector. Before installing and testing the helium mass spectrometer leak detector, please read this manual carefully to ensure that it is in optimal conditions and working safely. Only by strictly following this manual and using the helium mass spectrometer leak detector correctly can it operate safely and effectively.

This product must be operated and maintained by trained personnel. It is the responsibility of the user to carefully read and strictly comply with the safety measures described in the manual.

❖ **The images in this manual are for reference only. Without affecting performance and safety, our company reserves the right to upgrade products and change components without prior notice.**

2. Icon agreement

Warning

Warning refers to a potentially dangerous situation, which may cause personal injury if operated incorrectly.

Caution

Caution refers to potentially dangerous situations where operational errors can result in minor injuries to the instrument or person.

Notice

Notice refers to the situation where there is no harm, informing users of the precautions they need to pay attention to during daily use.

Section 2 Security Information

1. Explanation

Operators and maintenance personnel must be aware of all hazards associated with this product; And it is necessary to know how to identify and avoid dangerous and potentially hazardous conditions. Inexperienced, incorrect, or negligent operation of equipment may result in serious consequences.

All operators or maintenance personnel must carefully read the operation and maintenance instructions and all additional materials and must strictly comply with all warnings and precautions.

If you have any questions regarding safety, operation, or maintenance, please consult our after-sales service personnel.

2. Operation Condition

Usage environment:

(1) The product is only intended for indoor, industrial, and laboratory use.

(2) Operating temperature: 10℃～40℃, relative humidity: ≤ 80%.

(3) Working voltage: AC220V ± 10%, 50Hz.

(4) Altitude: below 2000 meters.

(5) Max allowable magnetic field: 8mT.

(6) Pollutant level: 2.

3. Danger

Improper operation by operators or maintenance personnel may cause injury to operators or surrounding personnel or damage the leak detector.

Warning

- It is strictly prohibited to use in environments containing flammable and explosive gases.
- The leak detector cannot suck in any liquid.
- When using hydrogen as a detection gas, maintain a concentration of less than 5% to avoid combustion.
- There is a permanent magnet in the leak detector, which may affect the pacemaker. Please keep a sufficient distance.
- If smoke, odor or noise is detected in the product, please stop using it immediately and contact the after-sales service personnel.
- Please do not disassemble or modify the product as it may cause electric shock or injury to personnel, and the product may not function properly. If disassembly or modification is required, please contact the manufacturer or after-sales personnel.
- Before installation and maintenance work, the power supply of the equipment must be disconnected.
- Leak detectors cannot be used with hazardous gases. Before using a leak detector, ensure that the product being tested has been cleared of hazardous gases. When detecting hazardous gases, the exhaust port of the leak detector should

be connected to an exhaust device with purification function.

- When pushing the leak detector, please check if the brake of the trolley's universal wheel is open.

- This leak detector is not suitable for long-term or long-distance operation on uneven road surfaces; If necessary, please place the leak detector on a separate transport vehicle for transportation.

Section 3 Product Description

1. Introduction

The NHJ series helium mass spectrometer leak detector is a leak detector with high sensitivity, fast speed, and wide range. It includes a turbo high vacuum molecular pump, an internal mechanical pump, an external mechanical pump, a mass spectrometry analysis chamber, a valve seat assembly, a circuit control board, an operation panel, and other optional functional components.

Helium mass spectrometer leak detector is a detection instrument that locates and quantifies the leakage points of sealed objects. The helium mass spectrometer leak detector selects inert gas helium as the detection gas. Helium has the characteristics of non-toxicity, inertness, low atmospheric content, small atomic weight, non-flammability, and easy passage through leaks. Helium is a safe gas that can be stored in various sizes of bottles and cans and is widely used in many fields.

- ★ Aerospace
- ★ Scientific Research
- ★ Military Industry
- ★ Automotive Refrigeration
- ★ Pressure vessels
- ★ Analytical instruments
- ★ Nuclear Industry
- ★ Power Plants
- ★ New Energy Industry
- ★ Semiconductor Industry
- ★ Precision machining
- ★ Medical instruments
- ★ High vacuum equipment engineering

2. Instrument construction

2.1 Overall dimensions

Fig.5 NHJ480 external dimension diagram

2.2 Gas Circuit Diagram

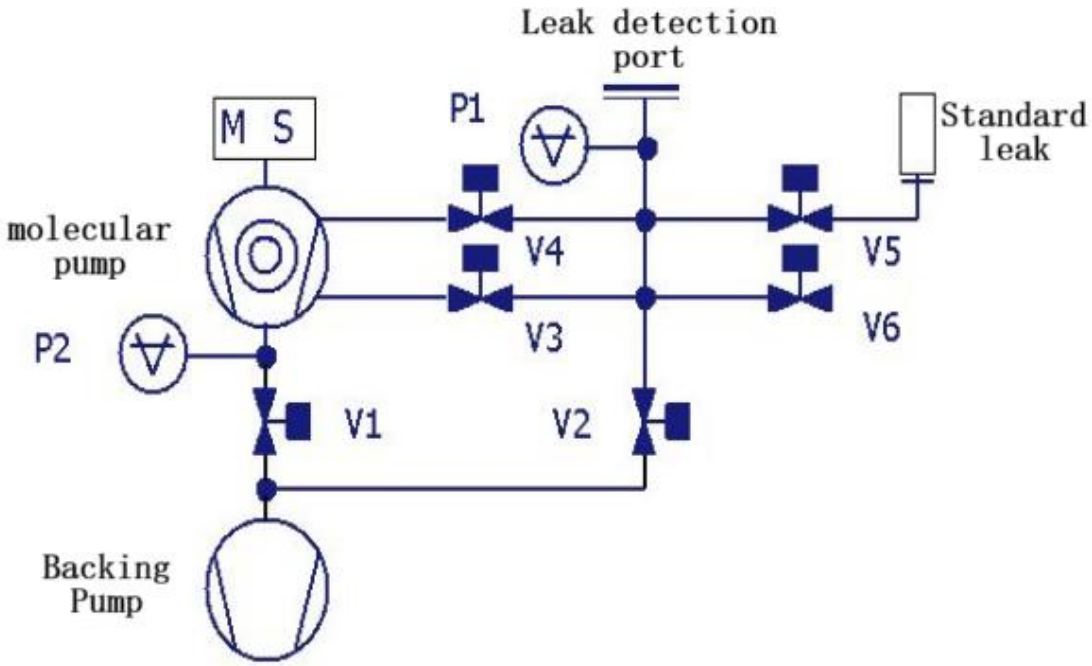

Fig.6 Gas Circuit Diagram

No	Material name	Explain	No	Material name	Explain
1	Backing Pump	Maintain the vacuum level of the molecular pump and leak detection port	8	V1	Leak detection valve for rough vacuum degree
2	Molecular pump	Maintain high vacuum level in the mass spectrometry analysis room and leak detection port	9	V2	Vacuum pre sampling inspection leakage valve
3	MS	Mass spectrometry analysis room	10	V3	Leak detection valve at medium vacuum level
4	P1	vacuum gauge	11	V4	Leak detection valve at high vacuum level
5	P2	Resistance regulation	12	V5	Internal leakage calibration opening valve
6	Standard leak	Provide standard numerical leakage holes	13	V6	Leak detection inlet valve
7	Leak detection port	Standard KF25 interface for connecting workpieces	14		

2.3 External Control Output Signal Interface

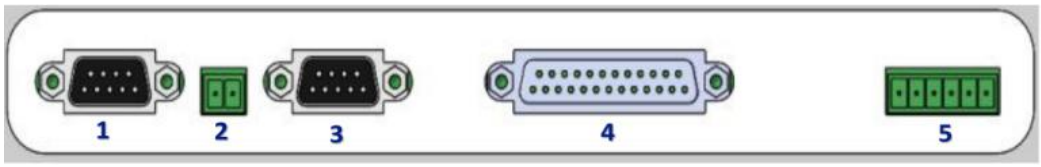

Fig.7 Signal Interface Diagram

1	RS232 interface	4	External input/output interface
2	RS485 interface	5	A0 interface
3	Remote control interface		

2.3.1 Input output interface

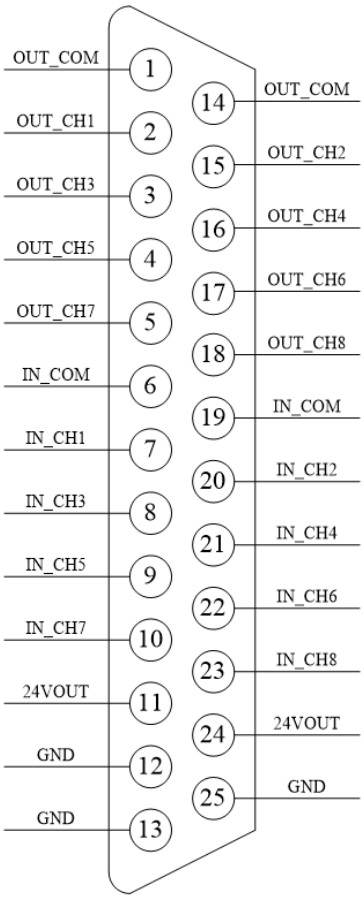

Channel number	Trigger mode	Level mode
IN_CH1	Calibration CAL	Calibration CAL(1)
IN_CH2	Vacuum mode/ sniffer mode	Vacuum mode/ sniffer mode (0/1)
IN_CH3	Zero adjustment	Zero adjustment(1)
IN_CH4	stop	stop(1)
IN_CH5	undefined	undefined
IN_CH6	undefined	undefined
IN_CH7	undefined	undefined
IN_CH8	undefined	undefined

Note: In level mode, calibration must be used to set IN_CH5 to 0; To clear the calibration status, a stop signal must be used, IN_CH4.

Channel number	Definizione di segnale
OUT_CH1	Alarm value 1 output
OUT_CH2	Alarm value 2 output
OUT_CH3	Alarm value 3 output
OUT_CH4	Alarm value 4 output
OUT_CH5	Vacuum degree 1 output
OUT_CH6	Vacuum degree 2 output
OUT_CH7	Standby output
OUT_CH8	Error output

2.3.2 RS232 and remote-control interface

Interface: DB9 male head

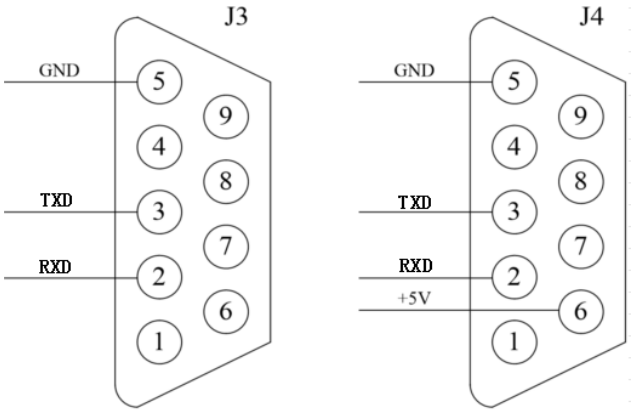

RS232 interface Remote control interface

2.3.3 Usage of output interface

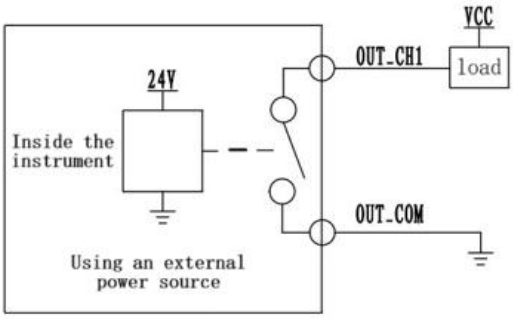

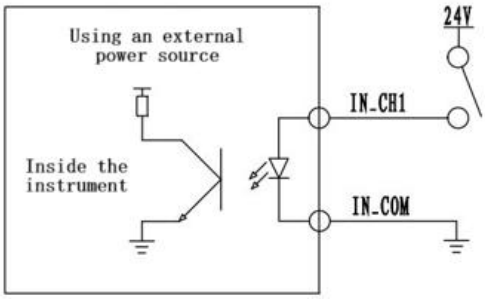

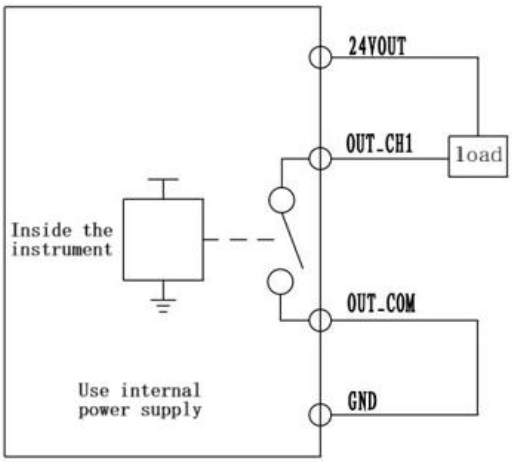

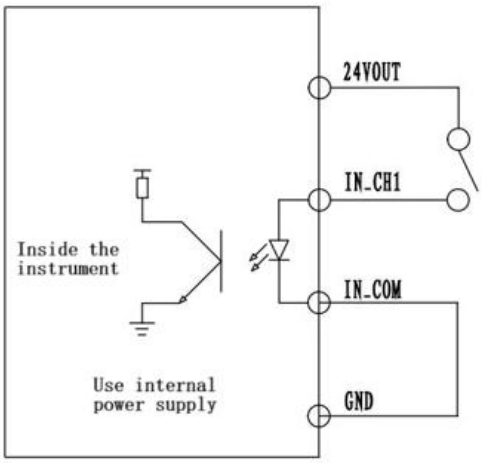

3. Technical parameters

Table 1 Performance Parameters of NHJ Leak Detector

Model	Performance Parameters	Parameter values
NHJ480 NHJ400M NHJ600 NHJ800 NHJ400	Minimum detectable leak rate	3×10^{-13} Pa • m^3/s
	Leakage rate display range	1×10^{-2} ～1.0×10^{-13} Pa • m^3/s
	Minimum detectable leak rate of sniffer	5×10^{-9} Pa • m^3/s
	Sniffer leakage rate display range	1×10^{-2} ～1.0×10^{-9}Pa • m^3/s
	Search gas	He、H_2
	Response time	≤0.5 S
	Start Time	≤120 S
	Working pressure	≤2000Pa
	Remote control	Optional
	Sniffer	Optional
	Filament switching function	Manual/Automatic
	Communication	R232, R485, USB
	Calibration	Built in leak calibration/ external leak calibration
	Interface size	KF DN25
	Backing Pump	D16C（NHJ480） E2M2.5（NHJ600） nXDS15i（NHJ800）
	Molecular pump	Imported with original packaging
	Cart	Standard configuration（NHJ480、NHJ800）
	Noise rating	58dB（A）
	External dimensions	(620×360×1036)mm（NHJ480、NHJ800） (620×370×480)mm （NHJ600） (650×390×955)mm （NHJ400） (420×359×275)mm（NHJ400M）

Table 2 Usage and Storage Conditions

Model	Environmental parameters	Numerical value
NHJ480 NHJ400M NHJ600 NHJ800 NHJ400	Ambient temperature （℃）	5～40
	Relative humidity	≤80%
	Maximum altitude （m）	2000
	Voltage	AC 220V±10%,50Hz (NHJ400M:DC24V)
	Power	Nameplate display
	Max magnetic field （mT）	8
	Pollution level	2
	Storage temperature （℃）	-20～55

Caution

Particular attention

After the leak detector is shut down, wait for more than 30 minutes before moving it, otherwise it may damage the molecular pump.

Exemption scope

(1) Prevent particles from entering the leak detector and causing damage to the molecular pump. Our company is exempt from warranty for this phenomenon, and corresponding fees will be charged for repairs.

(2) Prevent particulate matter from entering the interior of the mechanical pump and causing damage to the pump. Our company is exempt from warranty for this phenomenon, and corresponding fees will be charged for repairs.

(3) If the mechanical pump equipped with the leak detector is an oil pump, the pump oil needs to be replaced regularly. If the oil level is lower than the lowest mark of the pump oil window, it is necessary to refuel in a timely manner; If the pump oil appears black, brown, or white emulsion, it needs to be replaced with the same pump oil. Otherwise, long-term operation will cause the mechanical pump's ultimate vacuum to deteriorate, the pressure in the front stage to increase, and the molecular pump of the leak detector to be overloaded, resulting in other malfunctions such as molecular pumps. During maintenance, if our company's maintenance personnel discover the above phenomena and cause mechanical pump and leak detector failures, our company is exempt from warranty and will charge corresponding fees for maintenance.

Section 4 Installation of Leak Detector

1. Installation requirements

1.1 Location of leak detector

1.1.1 Power socket close to leak detector.

1.1.2 Leave a ventilation space of at least 15 centimeters around the leak detector.

1.1.3 Adequate safety space should be reserved for the operator to operate the instrument.

1.2 Working power supply of leak detector

1.2.1 AC 220V±10%,50Hz.

1.2.2 The power supply should have a reliable grounding.

1.3 Mechanical pump oil level

The oil sealed mechanical pump has been prefilled with the appropriate amount of oil during shipment. The glass window for observing the oil level is located on the side of the mechanical pump. When the pump is not running, the oil level should be at least 1/2 of the glass observation window and should not exceed the upper limit.

When the pump is running, the oil level should be above the lower limit of the oil level on the glass observation window.

Please refer to the 'Manual for Mechanical Pump'.

2. Installation

This series of NHJ480 models can be directly powered on after opening the box. If installation is required, please follow the steps below.

2.1 Remove the small cart from the large packaging box.

2.2 Remove the leak detector host from the small packaging box and place it on the trolley.

2.3 Remove the side panel from the trolley, find the shorter corrugated pipe in the accessories, and connect and fix the mechanical pump inlet and the main engine outlet with one KF25 clamp and O-ring at each end of the corrugated pipe.

2.4 Secure the host to the cart using M6 * 10 screws to ensure a reliable connection. Reinstall the side panel.

2.5 Plug in the power cord and turn on the power to start.

If you have any questions, please consult our after-sales service personnel!

Section 5 Operation

1.Operation panel

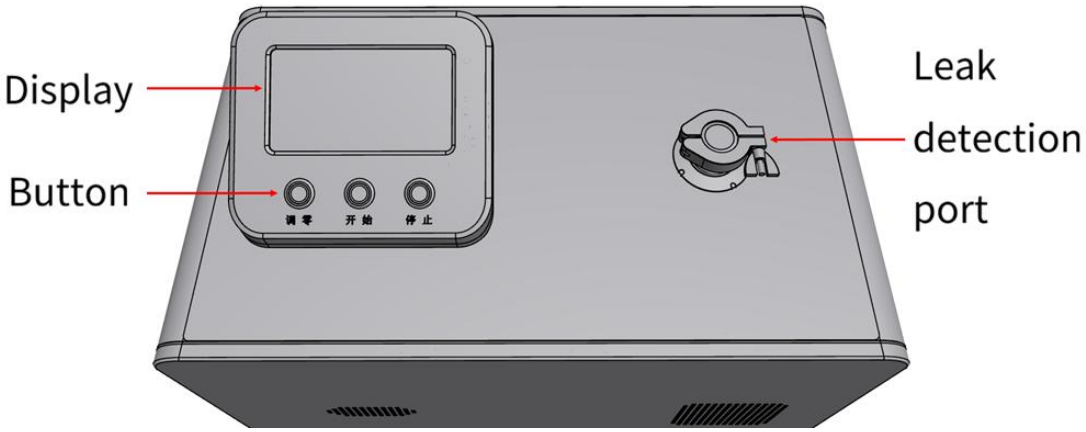

Fig.8 Leak detector operation panel

1.1 Leak detection port: used for connecting the leak detector and the inspected item.

1.2 Display screen: Used to display information when the leak detector is running.

1.3 Metal button: controls the start, stop, and zero adjustment of the leak detector.

2. Preparation before startup

2.1 Confirm whether the working environment of the leak detector meets the technical parameter requirements.

2.2 Confirm that the instrument has a reliable grounding.

2.3 Confirm that the vacuum pipeline connection of the product is reliable.

2.4 Connect the power cord of the instrument.

3. Start up

3.1 Press the green switch on the trolley to start the backing pump.

3.2 Press the power switch on the leak detector to start it.

3.3 The display screen of the leak detector after being powered on.

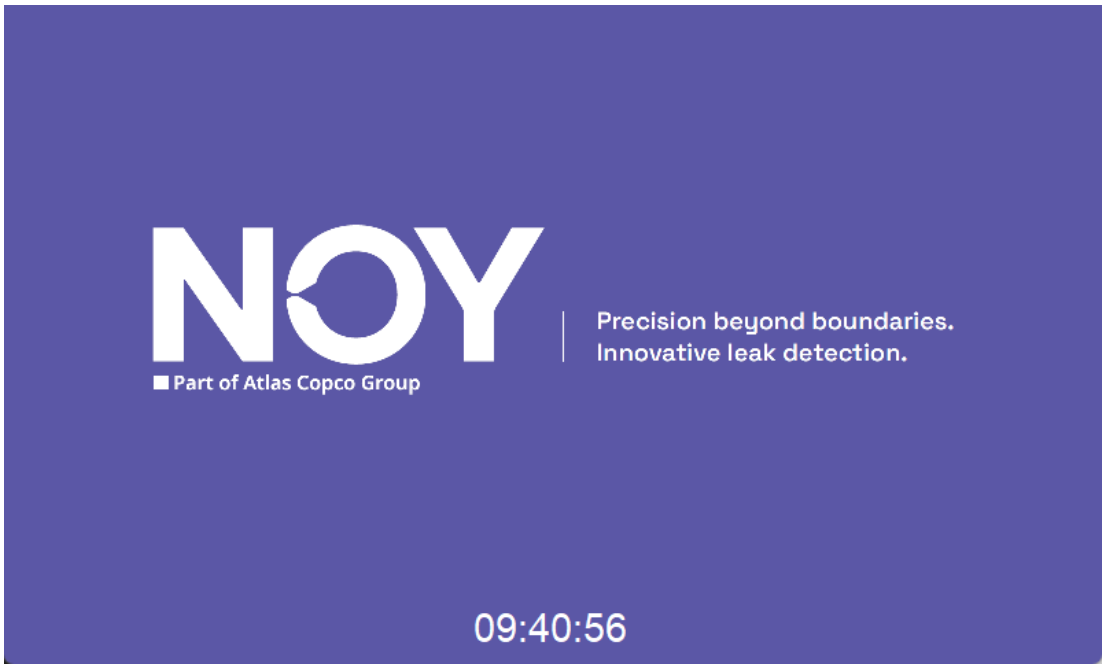

Fig. 9 Startup Screen

After powering on the leak detector, it enters the start-up process.

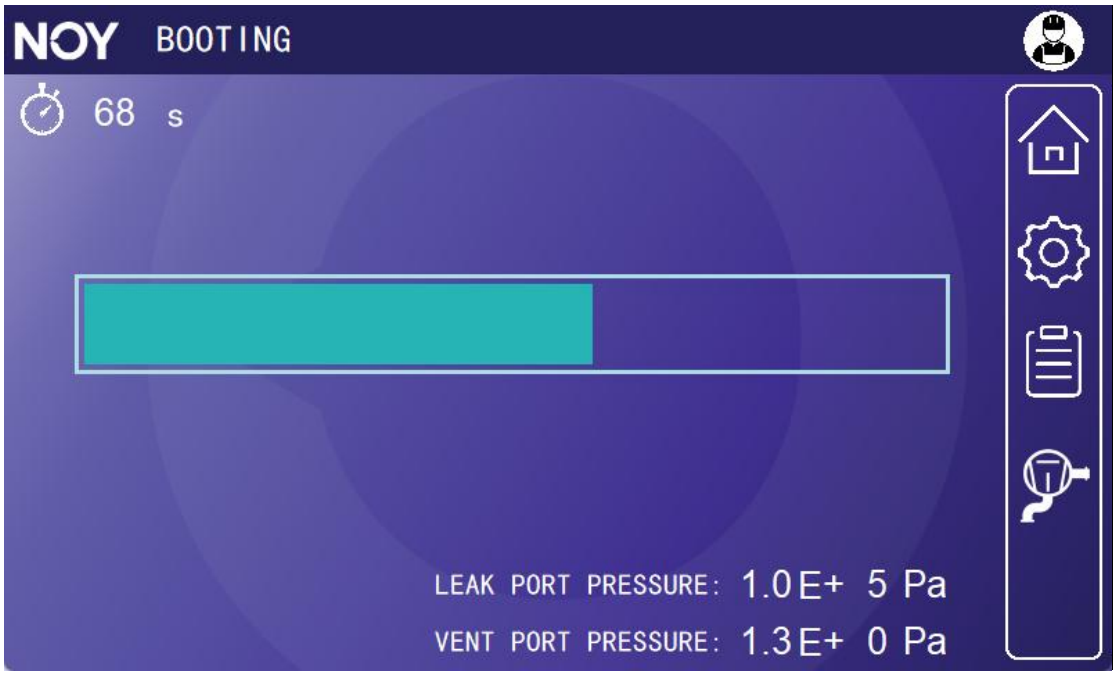

Fig.10 Startup Screen

The start-up time of the leak detector is less than 120 seconds. The start-up process of a leak detector is when the main components of the leak detector start working, And the process of self-inspection of the main components.

3.3.1 Start time: The time it takes to start the leak detector.

3.3.2 Vacuum degree: Real time vacuum degree at the exhaust port of the molecular pump.

3.3.3 Startup Progress: The startup percentage is displayed by a circular progress bar.

4. Standby mode

The standby mode of the leak detector indicates that it has completed startup. Can enter leak detection mode.

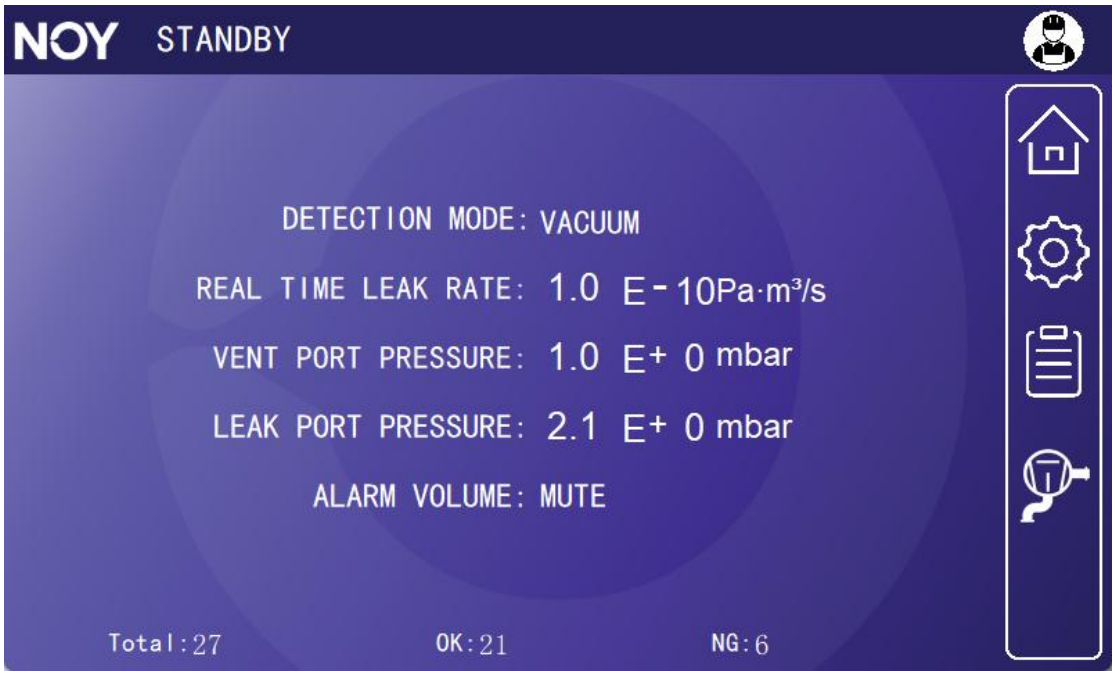

Fig. 11 Standby Screen

4.1 Leak mode: indicates that the current leak detector is operating in vacuum mode.

4.2 Real time leak rates: refers to the leakage rate value of the leak detector before the stop state.

4.3 Vent Port Pressure: Display the vacuum degree value of the molecular pump exhaust port.

4.4 Leak port Pressure: real-time vacuum degree of the leak detection port.

4.5 Alarm volume: The mode of horn sound during leak detection alarm.

5. Parameter setting

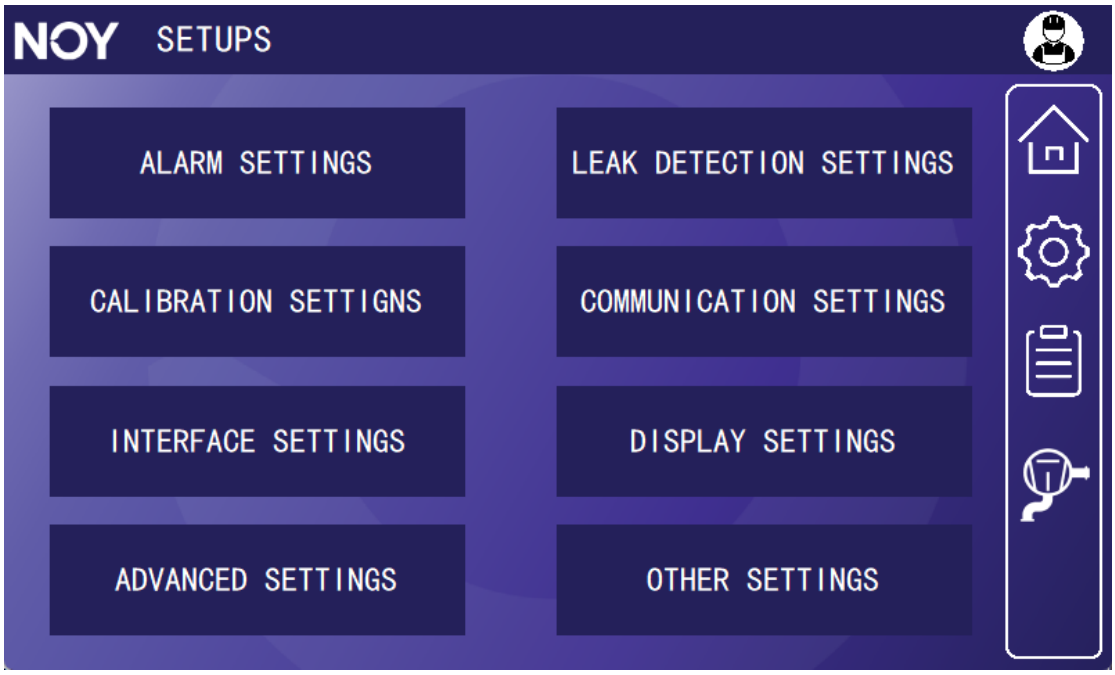

Fig. 12 Setting interface

When the leak detector is in standby mode, click the settings button and a password input keyboard will appear. Enter the password "8" on the keyboard, then click the ENTER key to enter the settings interface.

5.1 Alarm settings

In the settings interface, click on the alarm settings, and the alarm settings interface will appear.

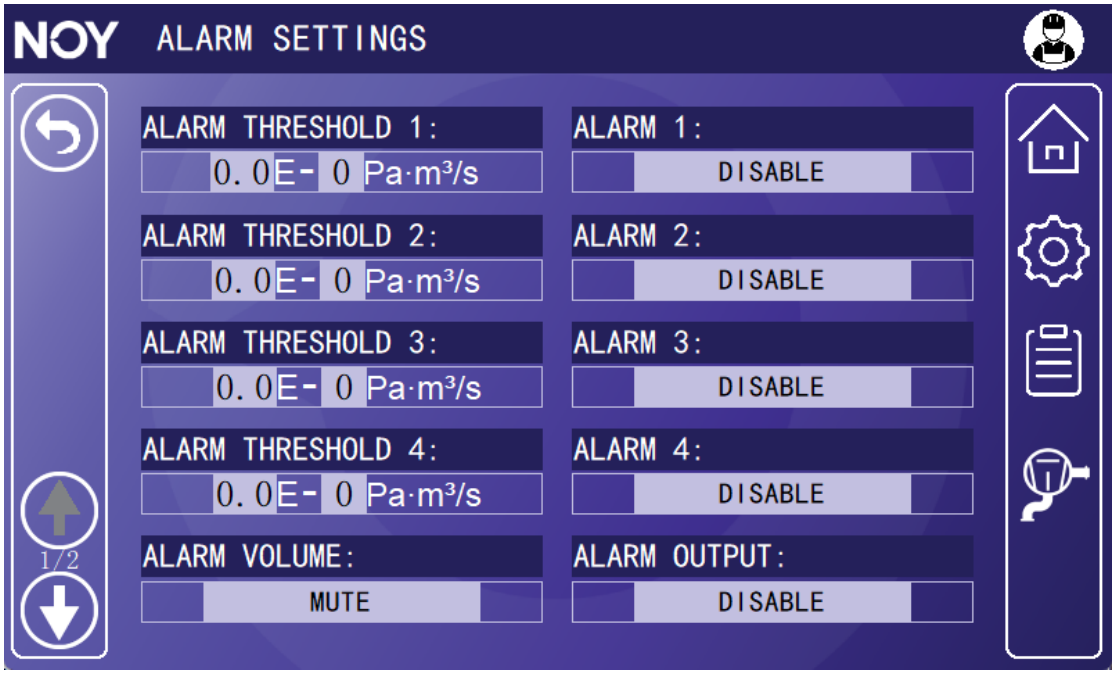

Fig.13 Alarm Setting Interface1

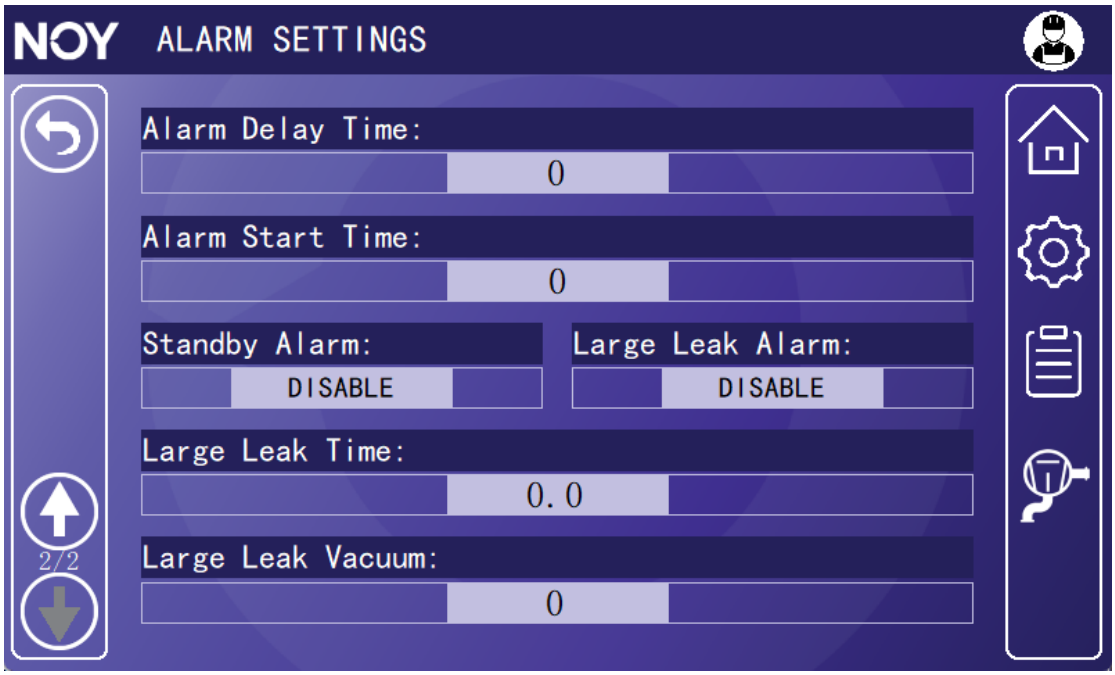

Fig.14 Alarm Setting Interface2

5.1.1 Alarm threshold: If the leakage of the inspected item exceeds the set value, the leak detector outputs an alarm signal or alarm.

5.1.2 Alarm Switch: Allow or prohibit leak detector

alarms.

5.1.3 Alarm Delay Time: After reaching the alarm value, the alarm will be triggered after a set delay of seconds.

5.1.4 Alarm volume: mute, low, medium, high.

5.1.5 Alarm output: Disable, Enable.

Disable refers to the prohibition of the leak detector from outputting alarm signals.

Enable refers to the leak detector allowing the output of alarm signals.

5.1.6 Large leak alarm: Disable or Enable.

5.1.7 Large leak time: When starting to evacuate and reaching the set time, if the vacuum degree of the leak detection port does not reach the set vacuum degree, the leak detector outputs a large leakage alarm signal.

5.1.8 Large leak vacuum: The preset vacuum value is reached by vacuuming.

5.2 Leak settings

In the settings interface, click on leak detection settings to enter the leak detection settings interface.

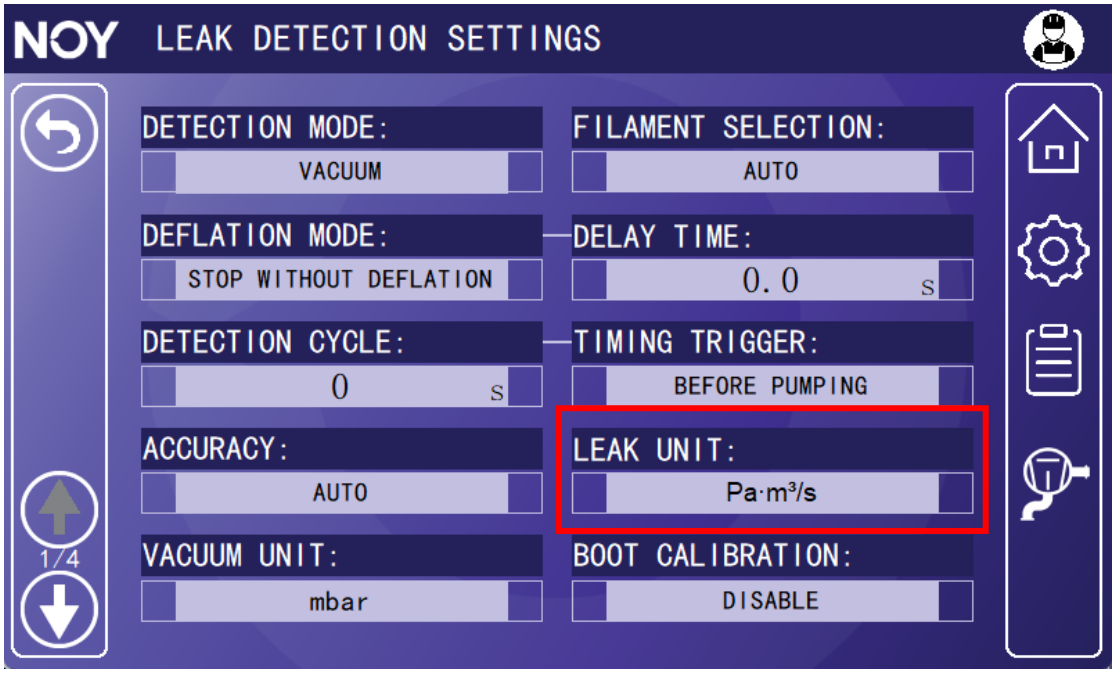

Fig.15 Leak detection setting interface 1

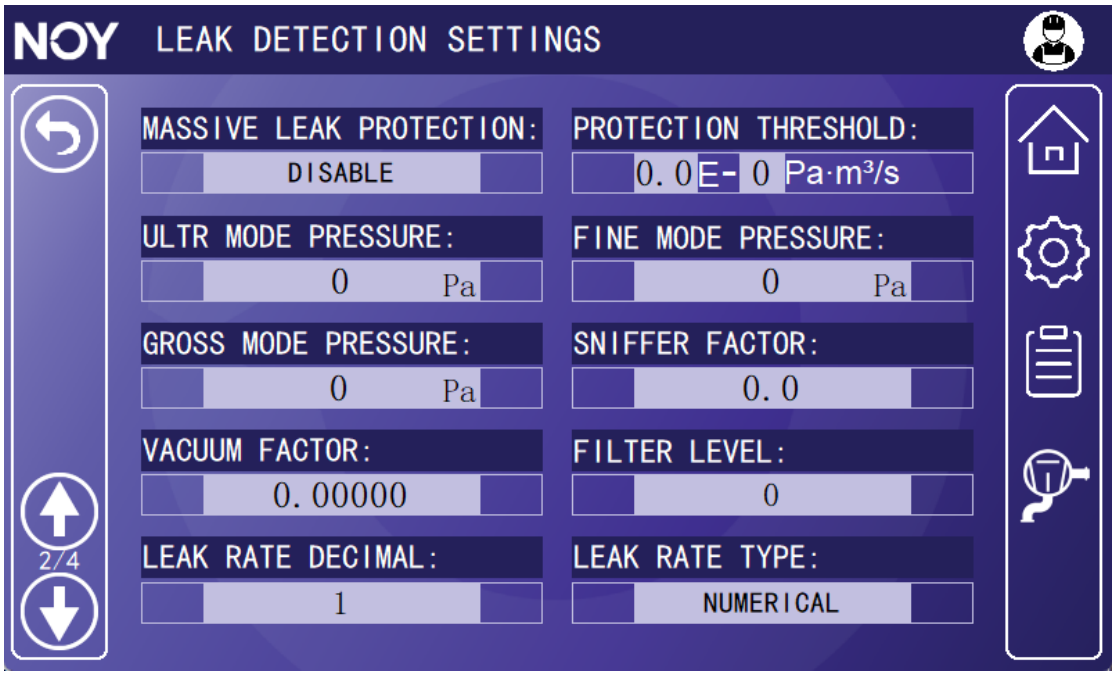

Fig.16 Leak detection setting interface 2

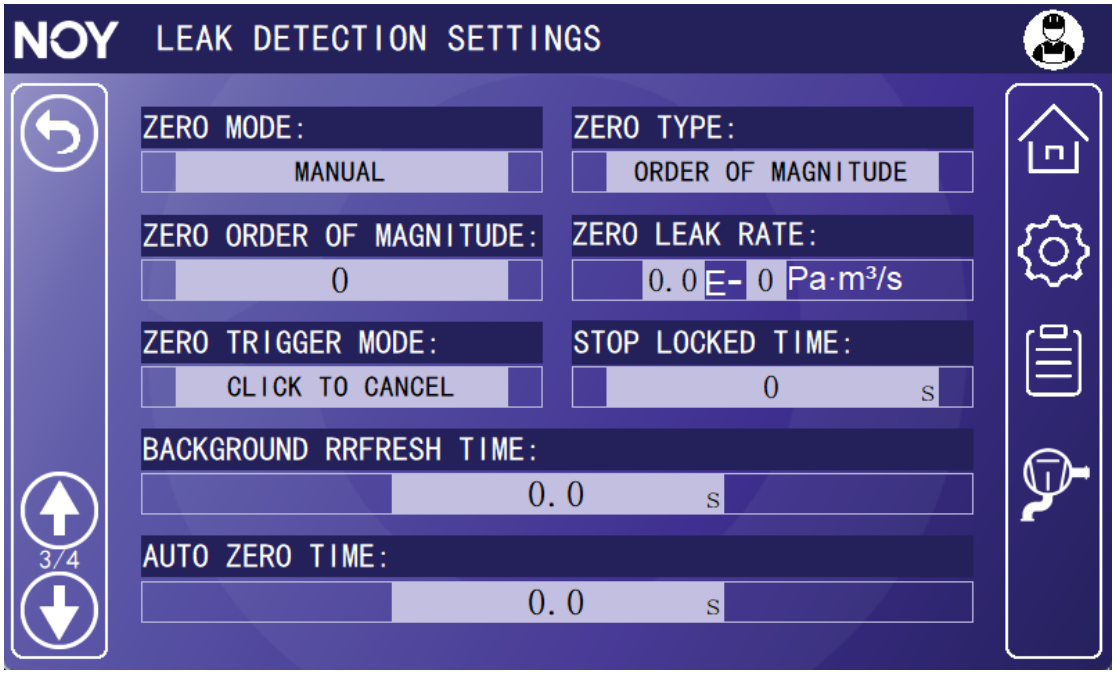

Fig.17 Leak detection setting interface 3

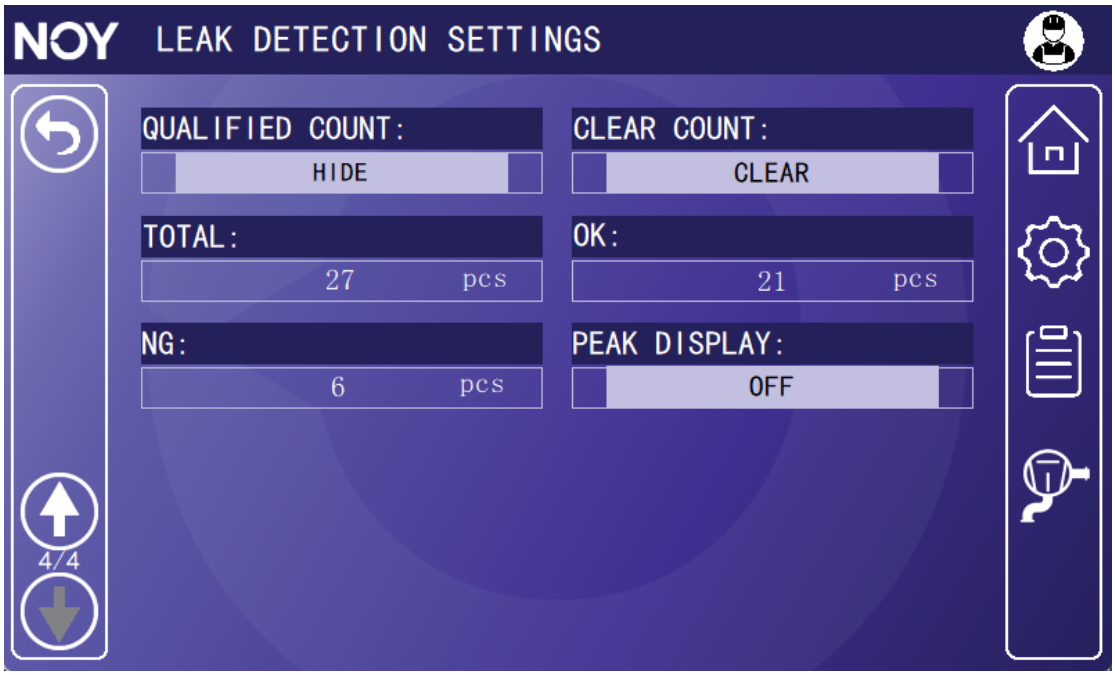

Fig.18 Leak detection setting interface 4

5.2.1 Leak Mode: vacuum mode, for negative pressure mode leak detection of workpieces. The sniffer mode is used for leak detection in the positive pressure mode of the workpiece.

5.2.2 Deflation Mode: Stop and deflate, which means that after pressing the stop button, the solenoid valve opens and air is released into the leak detection port. Usually used for detecting workpieces with small volume; Stopping without releasing air means that after pressing the stop button, the solenoid valve does not open, and the leak detection port will maintain a vacuum degree. Usually used for detecting workpieces with large volumes.

5.2.3 Filament selection: Automatic, for automatic switching of the filament; Filament 1 and Filament 2 are manually switched.

5.2.4 High Precision Gear Pressure: refers to the opening of the precision inspection gear after the vacuum degree reaches the set value.

5.2.5 Detection cycle: refers to the automatic stop after running for a set number of seconds.

5.2.6 Filter Setting: Dynamic Filtering, Static Filtering

Dynamic filtering: high accuracy, but slow response speed.

Static filtering: large fluctuations, but fast response speed.

5.2.7 Accuracy: automatic, low, medium, high.

Automatic: The system automatically controls the accuracy level based on the leak detection pressure.

Low: When the leak detection pressure is less than the set pressure for coarse inspection, only the coarse

inspection gear is activated.

Medium: The system automatically activates the medium or coarse inspection gear based on the leak detection pressure and does not activate the high gear.

High: The system automatically activates the intermediate, coarse, or fine inspection levels based on the leak detection pressure, like automatic.

5.2.8 Leak unit: Pa•m^3/s 、mbar•l/s、atm•cc/s、PPM。

5.2.9 Vacuum unit: mbar、Pa、atm、Torr。

5.2.10 ZERO can be used to suppress undesired helium backgrounds. If "ZERO" is enabled, the currently measured leak rate value will be interpreted as a helium background and subtracted from all subsequently measured values. The background value suppressed by "ZERO" is adjusted automatically if the background changes inside the device.

5.2.11 Zero mode: Manual, touch the zero button to enter the zero-calibration state of the instrument. Auto, after lightly tapping the start button, the instrument will automatically enter the zero-calibration state after the set time.

5.2.12 Zero Order: After entering zero calibration mode, the zero-display value is the index of the displayed value before zero calibration minus the set value.

5.2.13 Auto zero time: The cycle time for automatic zero calibration in automatic mode.

5.2.14 Background refresh time: The time when the software collects data and refreshes it.

5.2.15 Zero_Trg Mode: Set the button operation mode.

5.2.16 The machine factor is set in the software to modify the error between the displayed value and the actual value. Factory setting for vacuum factor: 1.0; Sniffer factor: 1.0.

If the customer needs to make modifications, simply tap on the numerical field and a "numerical keyboard" will appear. Enter the desired value on the keyboard and confirm.

5.2.17 Leak Decimal: Set the leakage rate display decimal places to one or two.

5.2.18 Leak display: Main interface display modes: numerical mode, histogram, curve chart.

5.3 Calibration Settings

In the settings interface, tap on the Calibration Settings to enter the calibration settings interface.

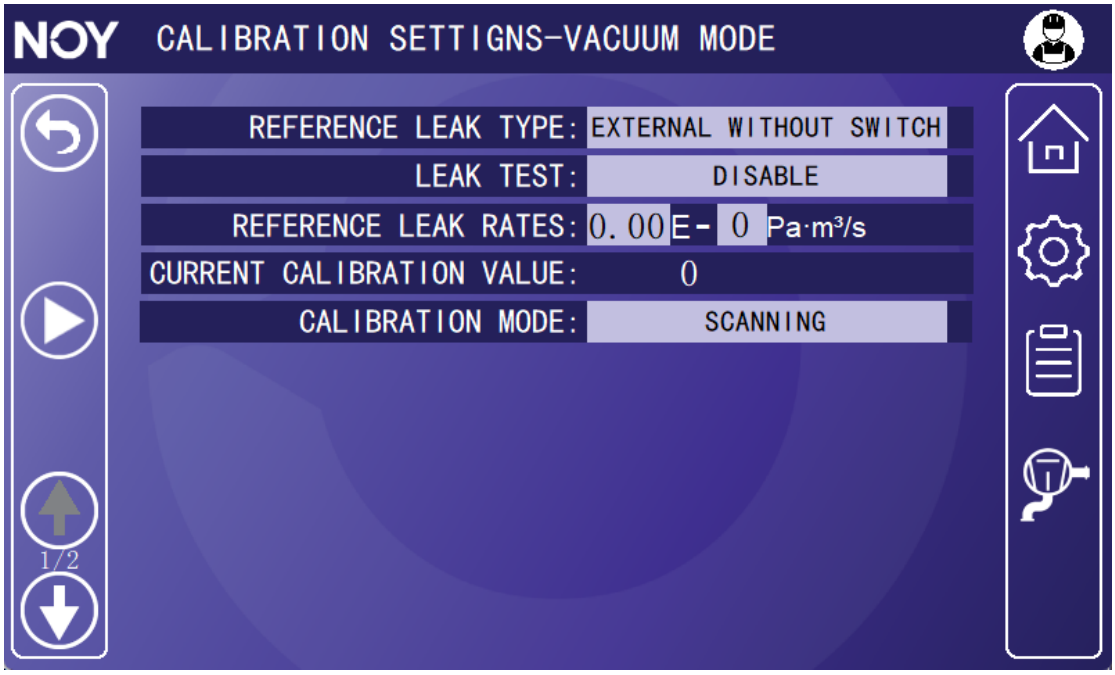

Fig.19 Leakage Setting Interface1

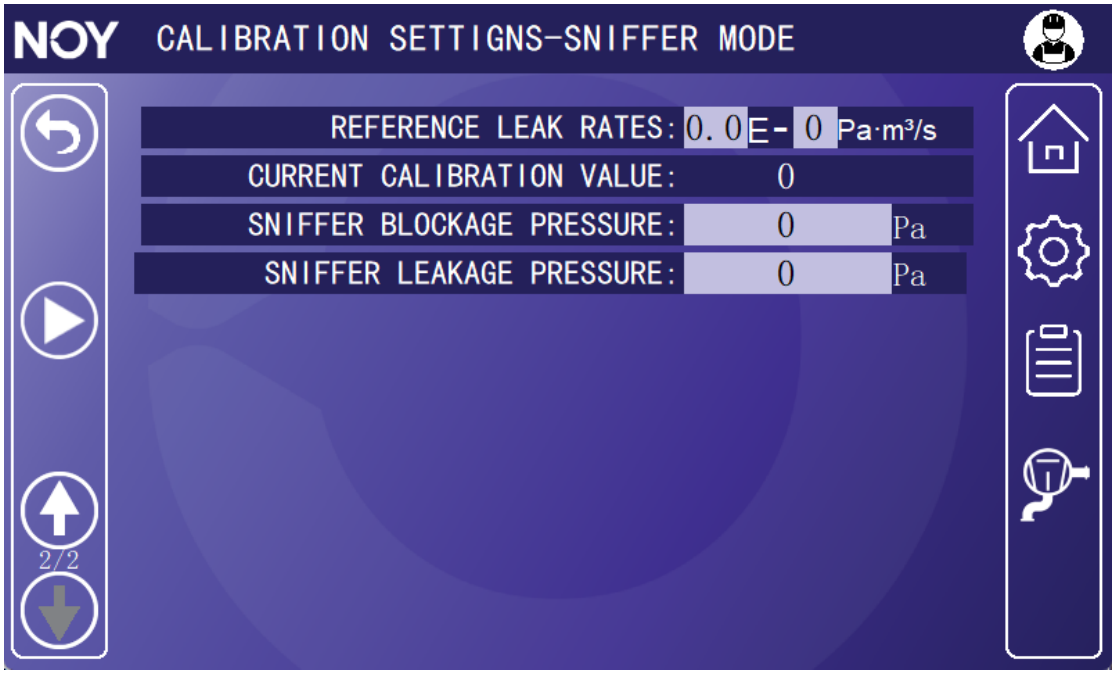

Fig.20 Leakage Setting Interface2

5.3.1 Vacuum calibration leak setup: Set the standard for the instrument using a standard negative 8-level leak hole.

5.3.2 Calibrated Leak type: "Built in" refers to the use of built-in leakage; 'External with switch' refers to the external leakage itself having a switch; 'External without switch' means that the external leakage itself does not have a switch.

5.3.3 Leak hole test: open and close. Is the leak test automatically performed after the calibration is completed.

5.3.4 Calibrated Leak rate: The set value is the calibrated value on the standard leakage hole.

5.3.5 Calibration Mode: Set the calibration mode for the next calibration. Scanning calibration involves rescanning the helium peak, while rapid calibration involves

performing rapid micro scanning calibration.

5.3.6 When calibrating, if selecting built-in, open the leak setting interface, change the set value to the calibration value on the nameplate, click start vacuum calibration, and the instrument will automatically calibrate. If you choose external without a switch, you need to install an external standard leak at the leak detection port, change the set value to the calibration value on the standard leak, and then click on start vacuum calibration. The instrument will automatically calibrate. If you choose 'sniffer calibration' or 'external with switch', first assemble the sniffer or external leak, and then operate according to the instrument instructions.

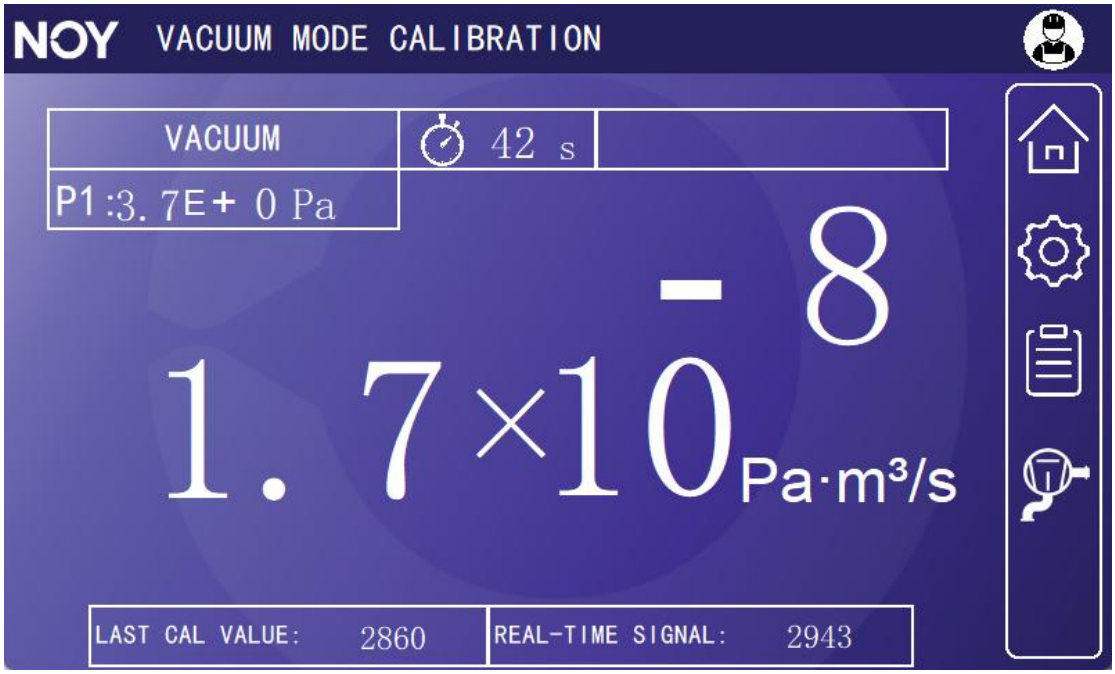

Fig.21 Interface for external leakage without switch

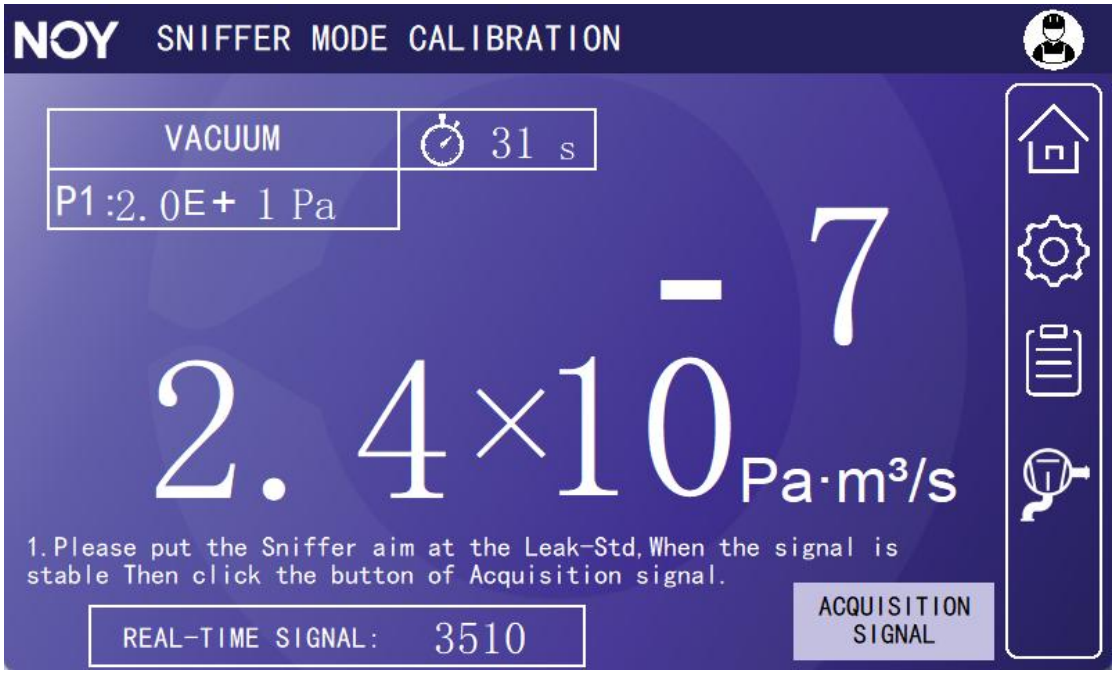

Fig.22 sniffer calibration interface

5.4 Communication settings

In the settings interface, tap on the communication settings to enter the communication settings interface.

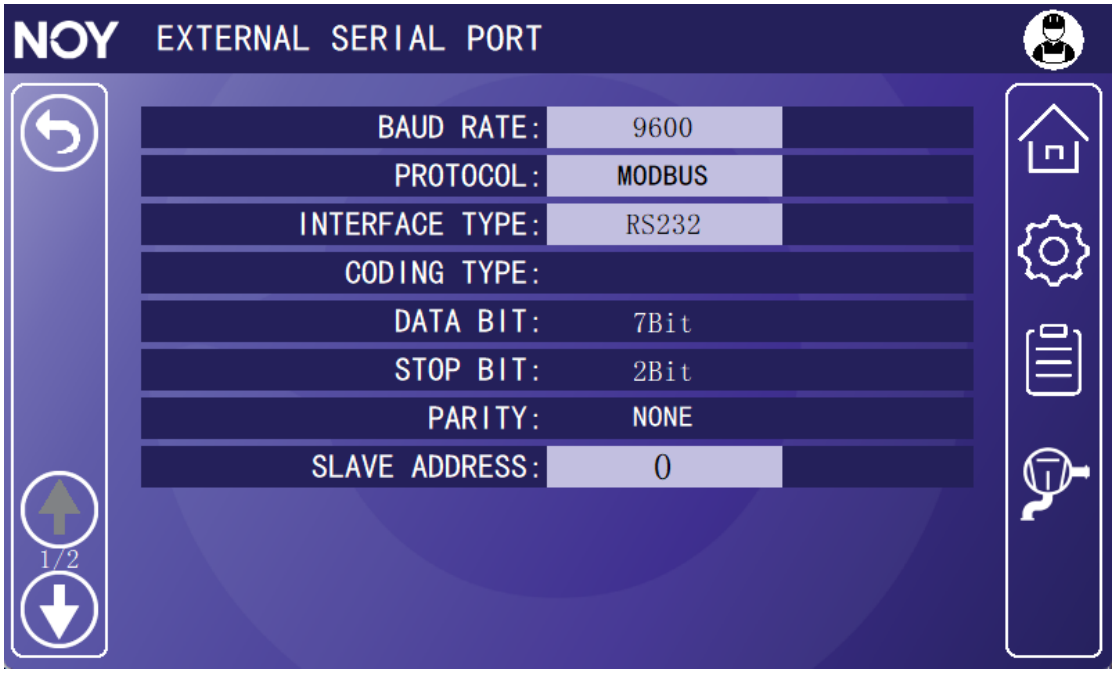

Fig.23 Communication Settings Interface1

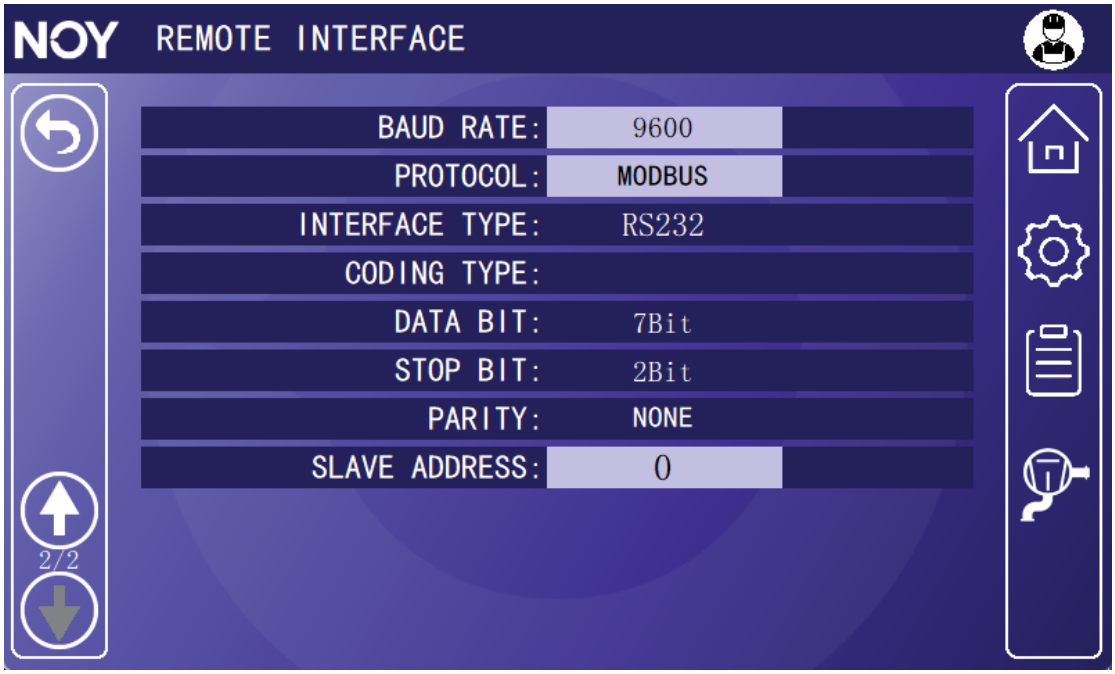

Fig.24 Communication Settings Interface2

5.4.1 Communication settings: External serial port.

5.4.2 Baud rate: 9600, 19200, 38400, 57600, 115200.

5.4.3 Protocol: Modbus, NOY protocol 1, protocol 2, protocol 3.

5.4.4 Uart type: RS232、RS485.

The actual setting value is determined based on the serial protocol of the connected device.

5.5 Interface settings

In the settings interface, tap on the interface settings to enter the interface settings interface.

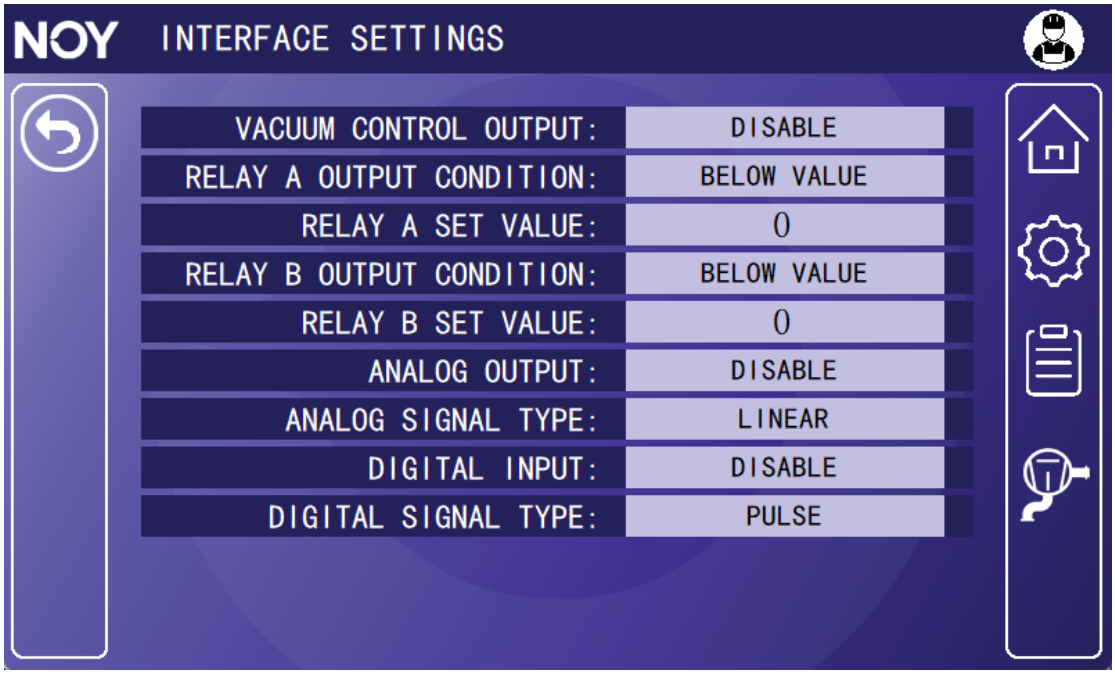

Fig.25 Interface Setting Interface

5.5.1 Vacuum control output: Disable, Enable.

Disable: The vacuum relay on the output board is prohibited from outputting.

Enable: Allow the vacuum relay on the output board to output.

5.5.2 Output conditions: Below or above value.

Below value: When the vacuum relay output is allowed, if the vacuum degree of the leak detection port is lower than the set value, the relay outputs a vacuum signal.

Above value: When the vacuum relay output is allowed, if the vacuum degree of the leak detection port is higher than the set value, the relay outputs a vacuum signal.

Set value: Set the vacuum value when the customer needs to output a signal.

5.5.3 Analog output: Disable, Enable.

Disable: The instrument is prohibited from outputting analog signals.

Enable: Allow the instrument to output analog signals.

5.5.4 Analog Signal Type: linear, Index.

Linear: When the analog output is allowed, output a linear analog signal.

Index: When the analog output is allowed, output an exponential analog signal.

5.5.5 Digital Input: Disable, Enable.

Disable: Prohibit switch input signals and control instruments.

Enable: Allow switch input signals to control instruments.

5.5.6 Digital Signal Type: pulse, level.

Pulse: When the switch input is allowed, an external pulse signal can be used to control the instrument.

Level: When the switch input is allowed, an external level signal can be used to control the instrument.

5.6 Other settings

On the settings interface, tap on other settings to enter the other settings interface.

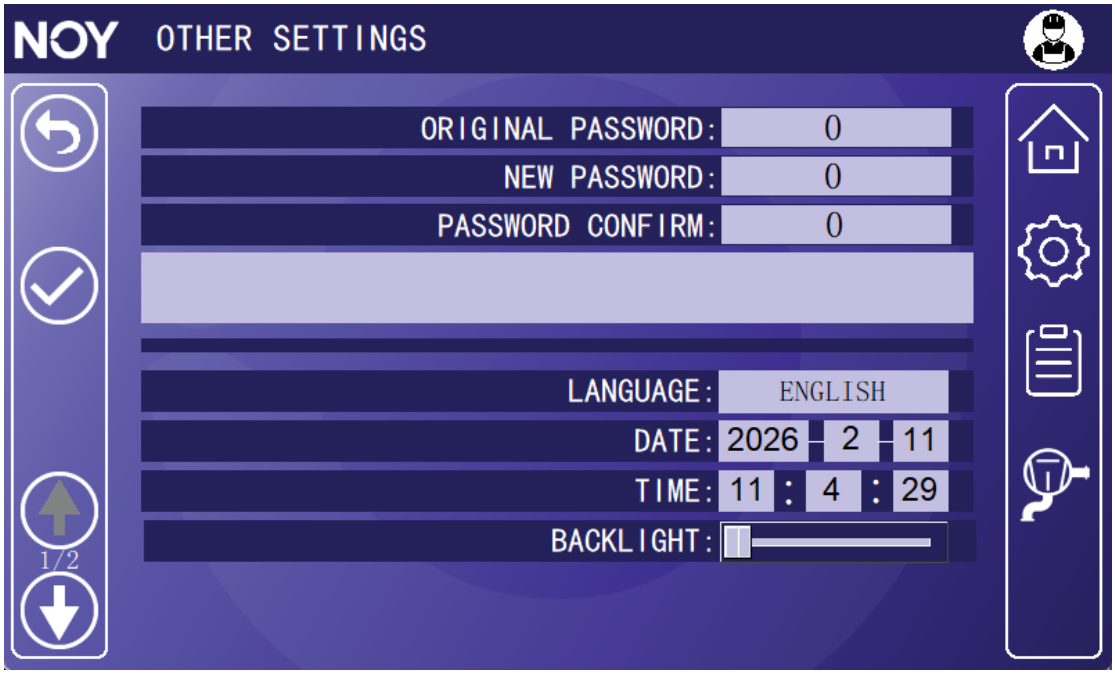

Fig.26 Other settings interface

Click on the displayed number to choose to change password, time, and language.

After changing the original password "8", remember it firmly to avoid forgetting.

5.7 Advanced settings

Advanced settings are provided for our company's debugging and after-sales personnel to set instrument parameters for use. Customers do not need to set parameters for this interface.

If you have any special needs, you can contact our after-sales personnel for consultation.

5.8 Historical records

On the settings interface, tap 'Record' to enter the record interface.

Fig.27 Record interface

Historical records: It records the leakage rate detected by the leak detector at the end of each leak detection. Compare with the alarm value and output the leak detection result OK/NG.

Export: If you need to export the recorded values, simply insert the USB drive into the USB port on the side of the display screen, and then click Export to import the data into the USB drive. Simply insert the USB flash drive into the computer to read the recorded data.

Delete all: It means deleting the recorded data. Clear data memory.

With the update of software versions, the above functions may perform slightly differently on different devices without further notice.

The above parameter indicators, on the premise of meeting national standards, the manufacturer reserves the right to upgrade and modify the indicators of the product without further notice.

6. Measurement

6.1 After running for 20 minutes, perform calibration.

6.2 Select the desired working mode.

6.3 Set parameters that meet current needs.

6.4 Connect the measurement object properly.

6.5 Press the start button in standby mode to initiate the measurement process. For specific leak detection methods, please refer to section 7.

6.6 Observe the measurement results by displaying the leakage rate.

6.7 Record measurement values as needed.

6.8 Click the stop button to stop the measurement.

6.9 Turn off the instrument and disconnect the power supply.

7. Main interface display

Numerical

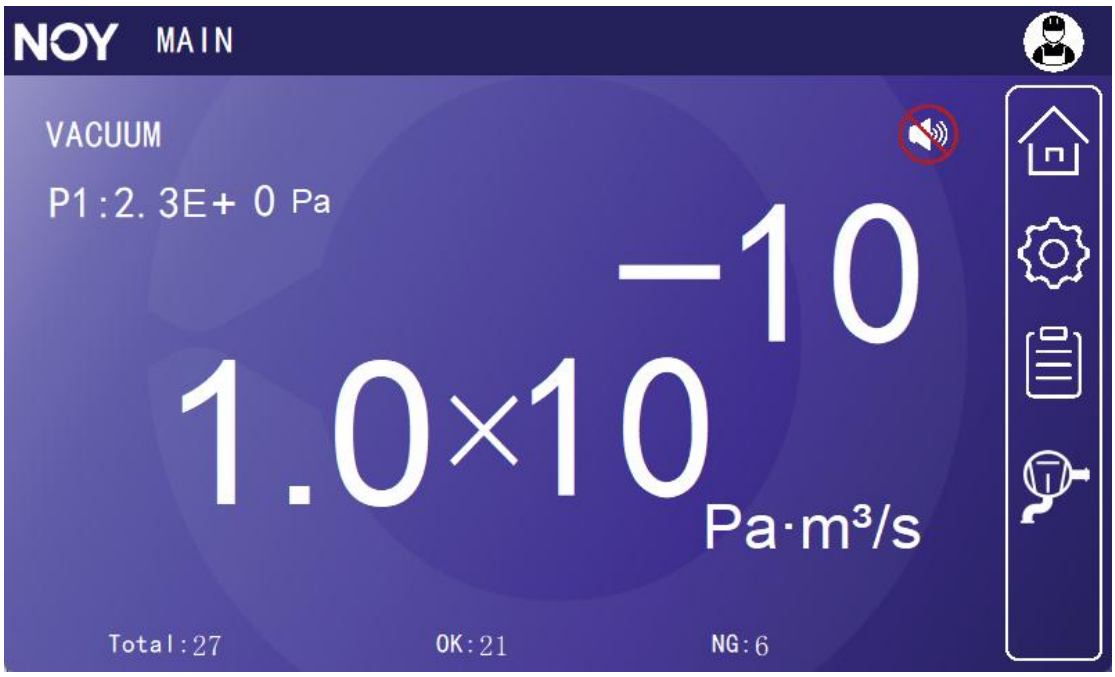

Fig.28 Numerical display interface

Line graph

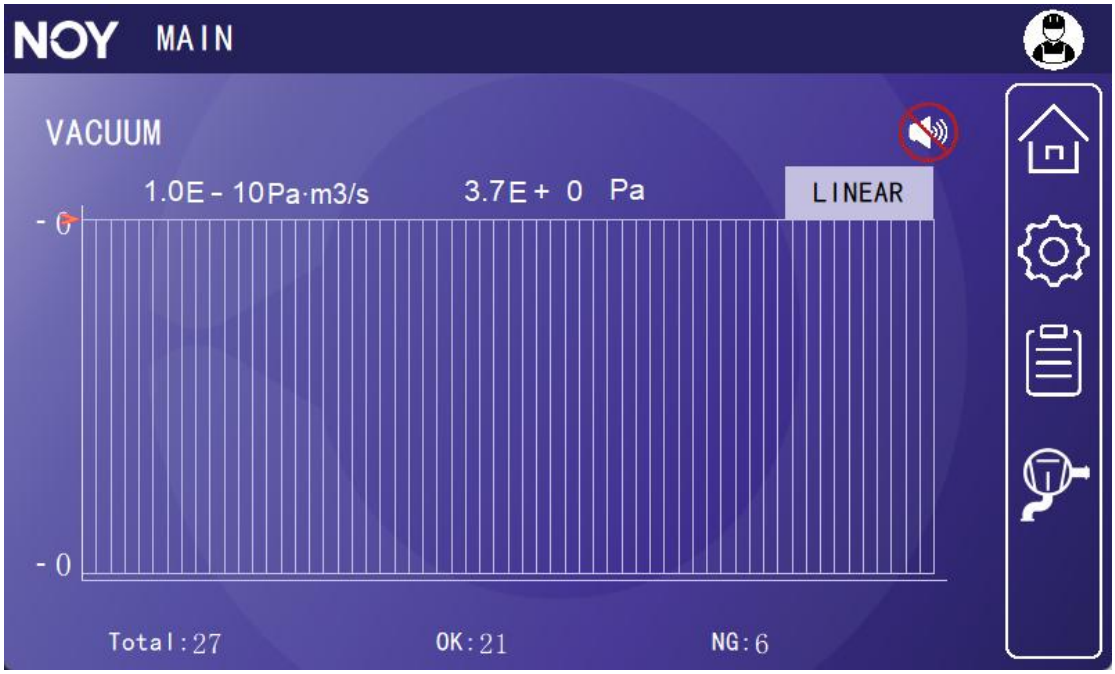

Fig.29 Line graph display interface

8. Status interface

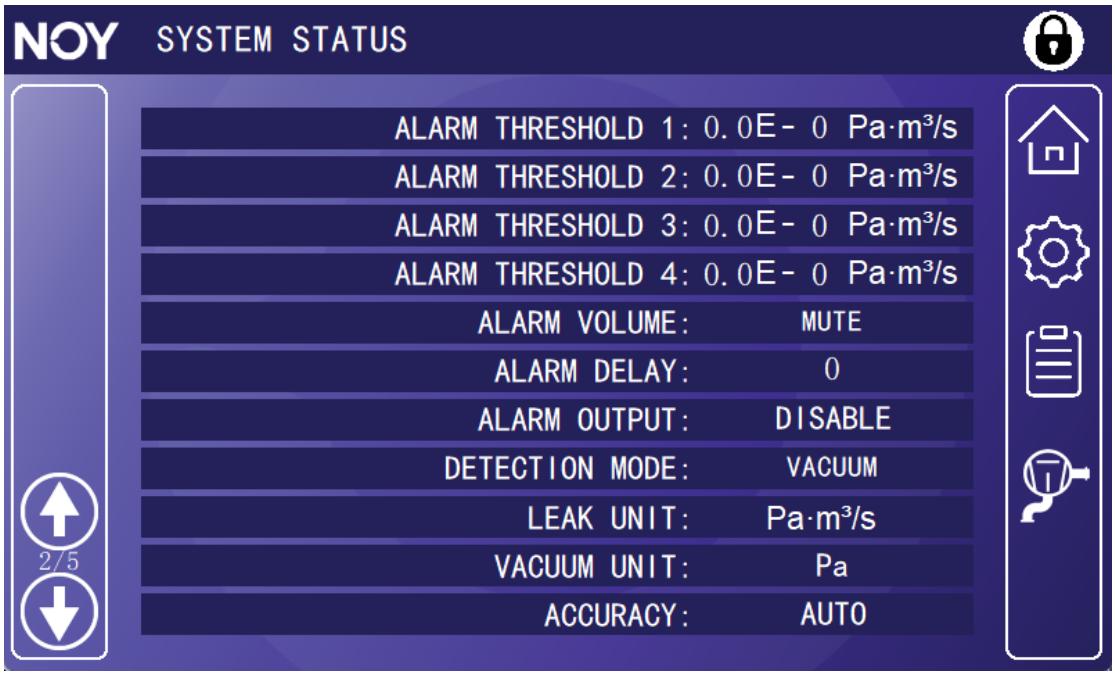

Fig.30 System Status 1

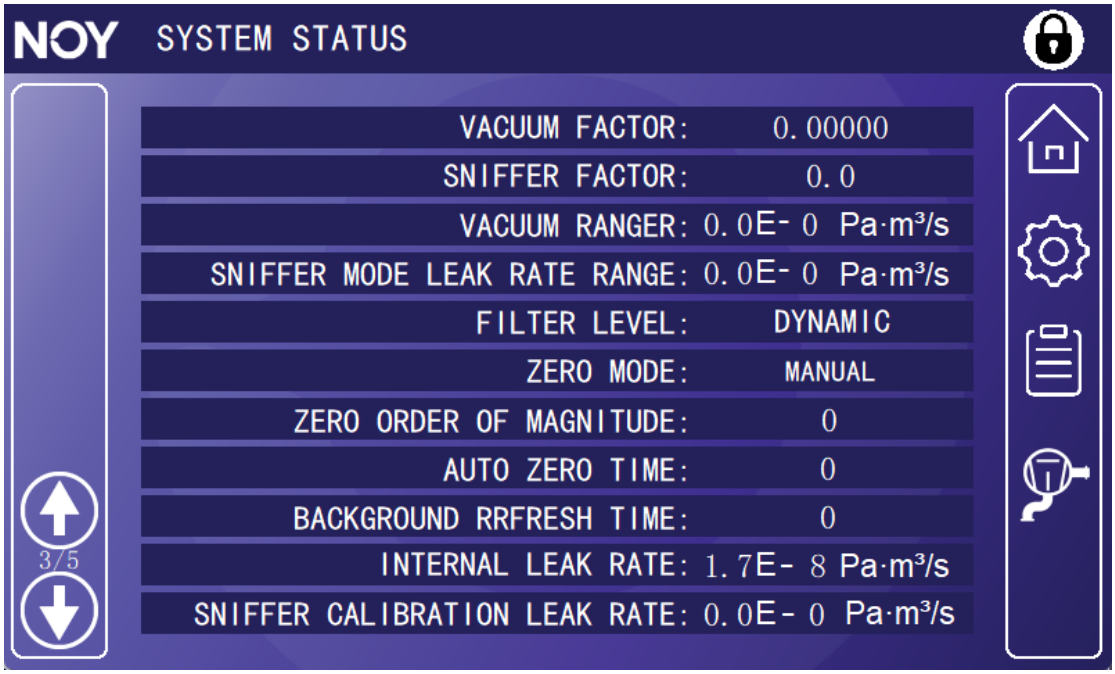

Fig.31 System Status 2

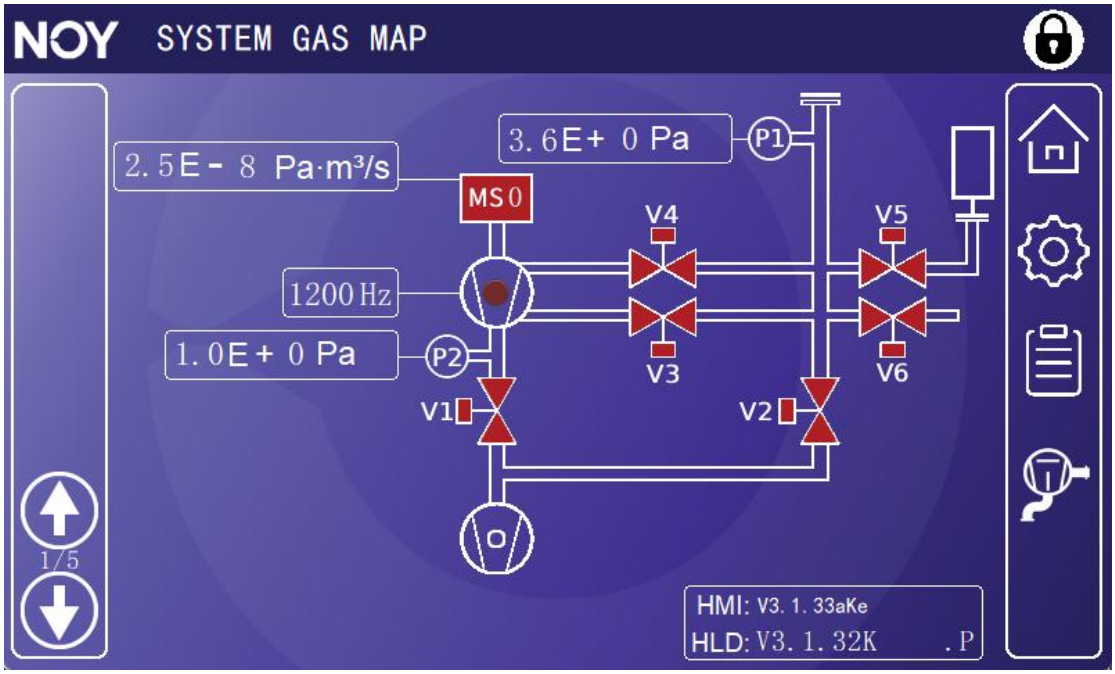

Fig.32 Vacuum diagram

Status interface: Display the instrument's internal settings and operating parameters. Convenient for customers and after-sales personnel to view.

Section 6 Calibration process

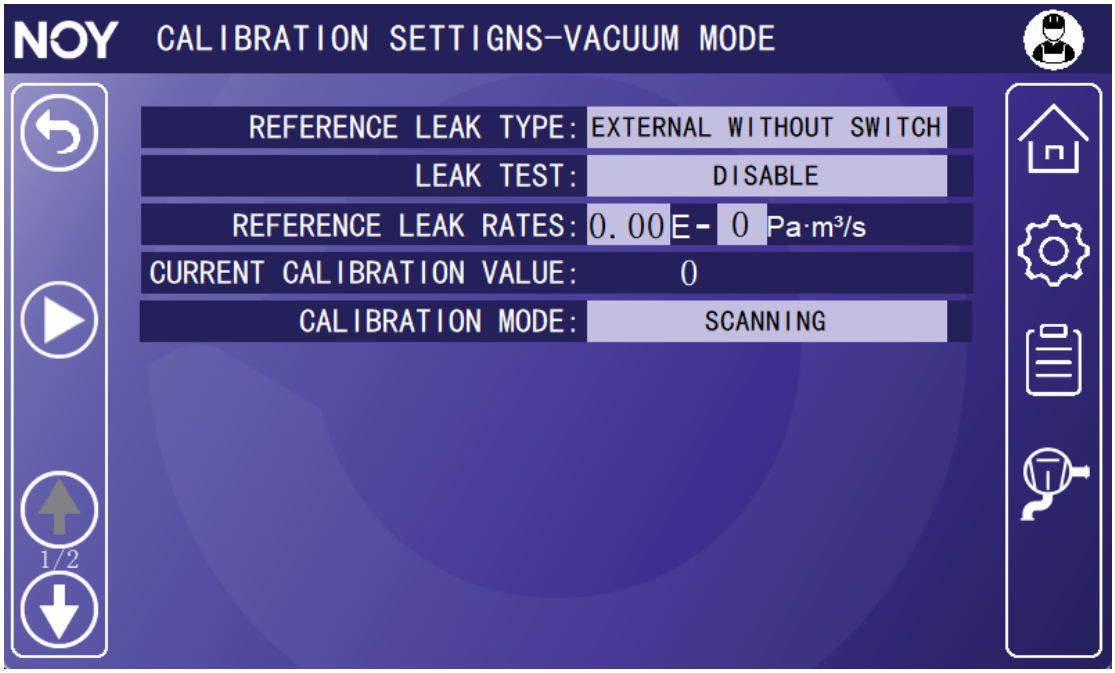

Fig.33 Calibration Setting Interface

1.External calibration

1.1 Prepare an external standard leak of -8 levels and install it at the leak detection port.

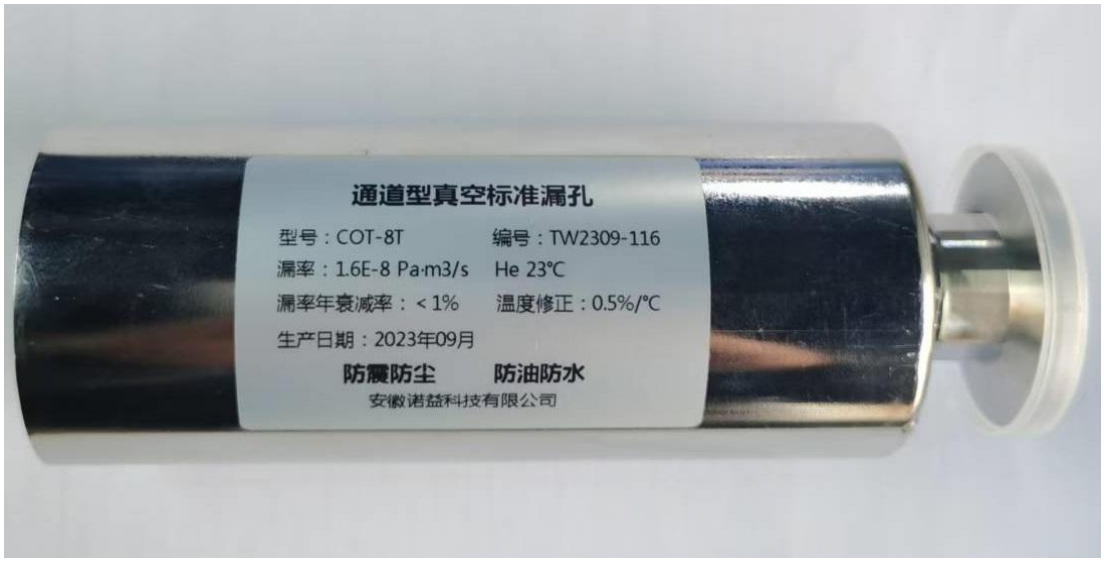

Fig.34 Calibrated Leak

1.2 Click on Setups on the standby interface to enter the Setups interface.

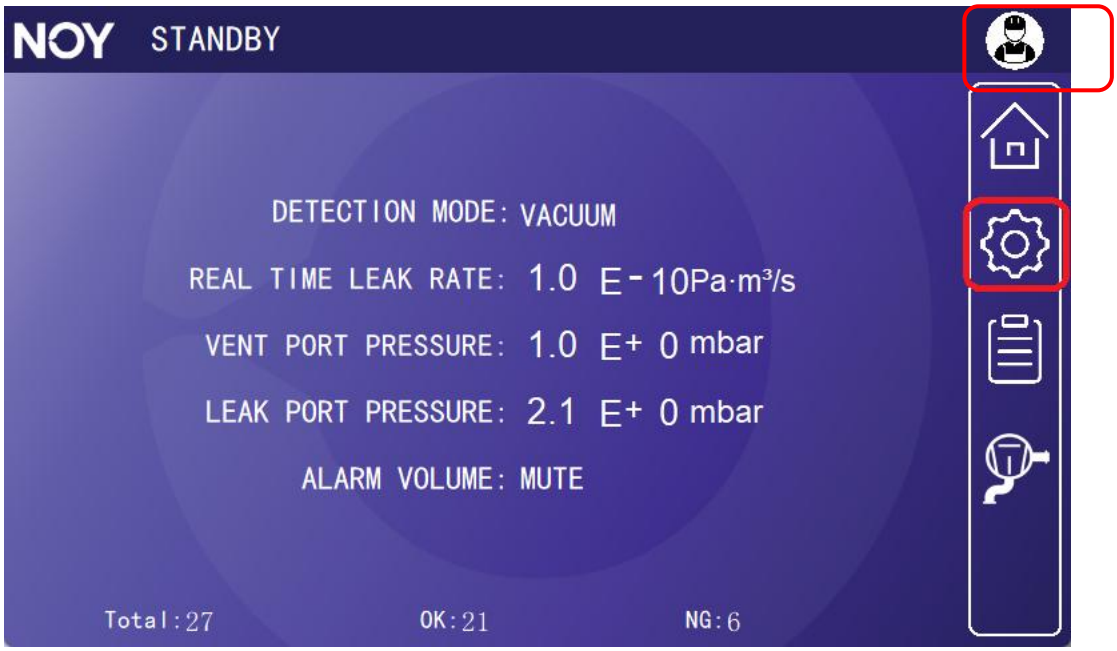

Fig.35 Standby interface

1.3 Click on 'LEAK DETECTION SETTINGS' to enter the Leak Settings interface.

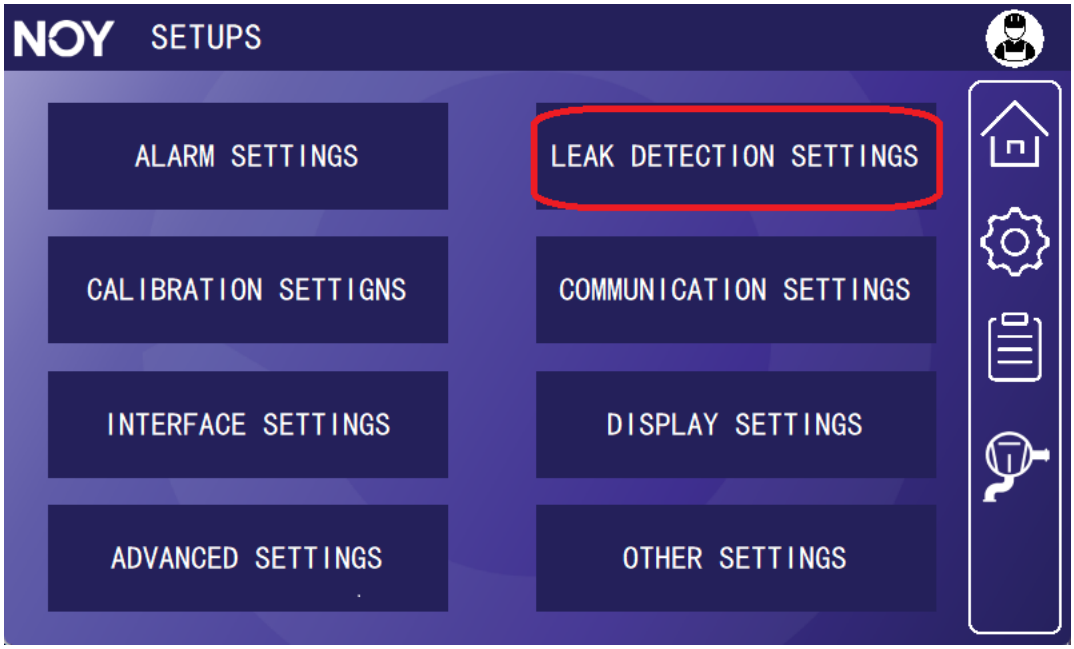

Fig.36 Setups interface

1.4 Set the Leak Mode to 'vacuum'.

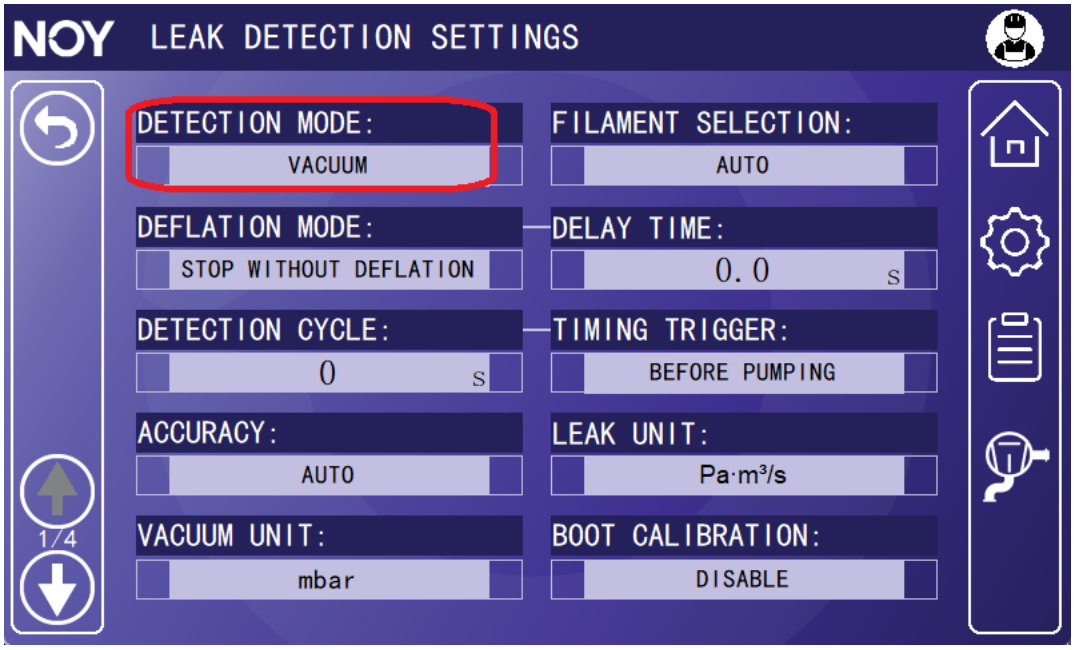

Fig.37 Leak Settings interface

1.5 Return to the Setups interface, click on 'Calibration Settings' to enter the 'Calibration Settings' interface.

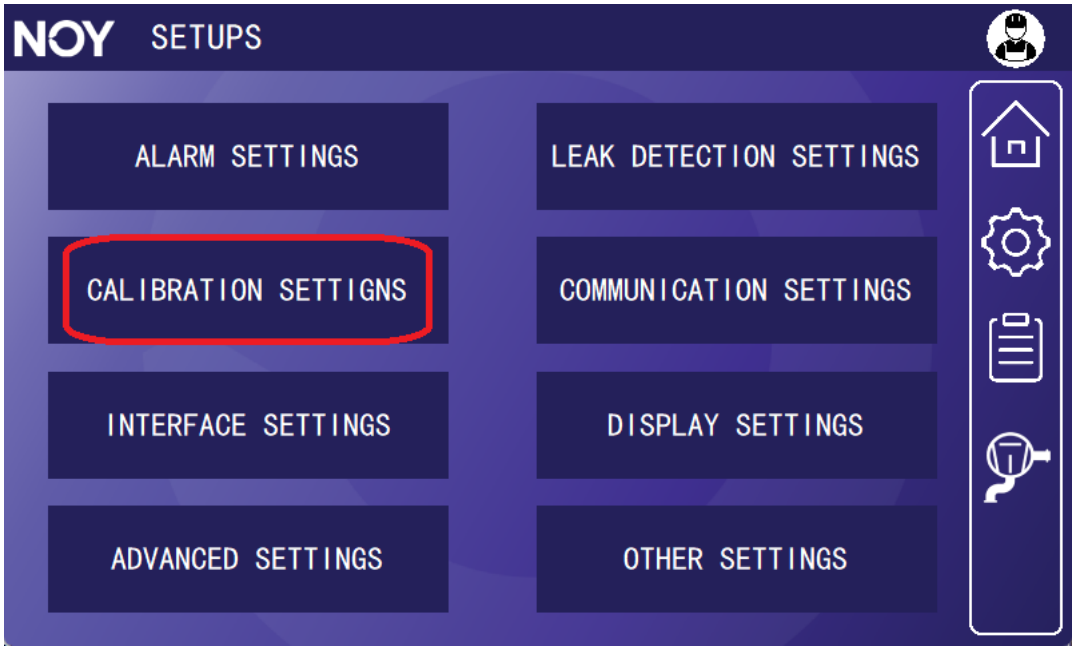

Fig.38 Setups interface

1.6 Set the 'Calibrated Leak Type' to 'External Without Switch' and the "Leak Hole Test" to "Disable".

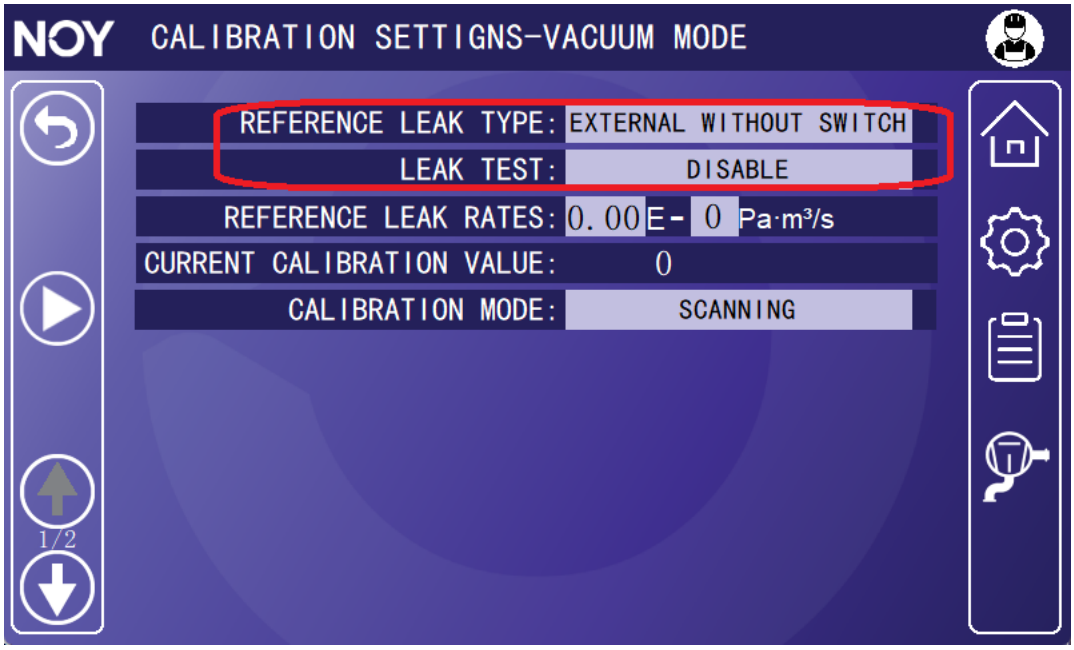

Fig.39 Calibration Settings interface

1.7 Set the 'Calibrated Leak Rate' according to the leak rate value on the nameplate of the leak; Set the 'calibration mode' to 'scanning'.

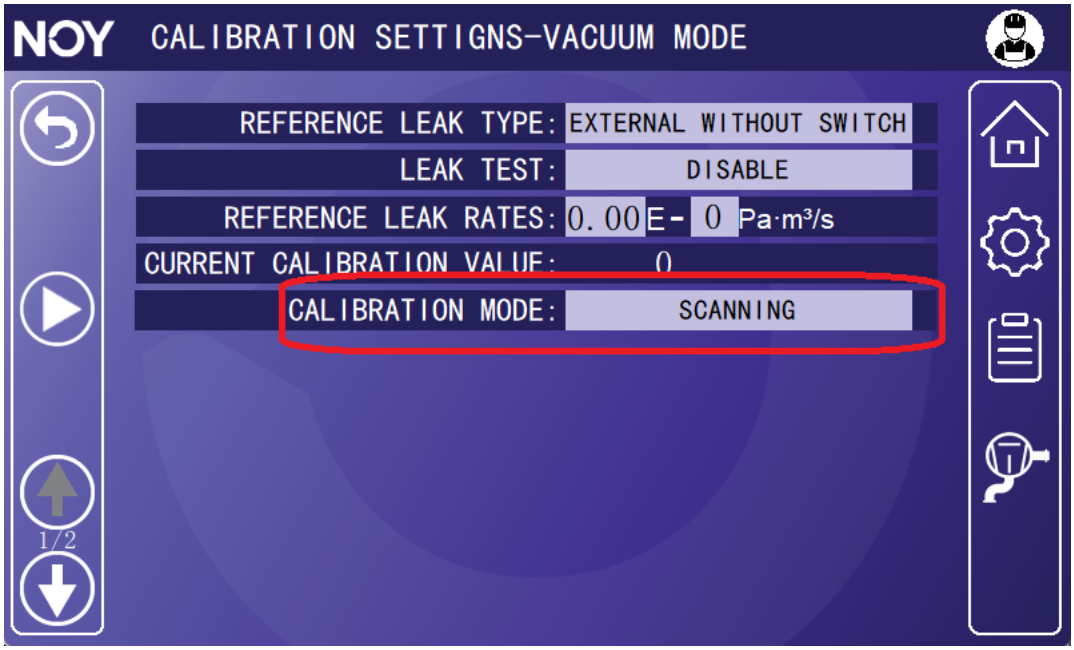

Fig.40 Calibration Settings interface

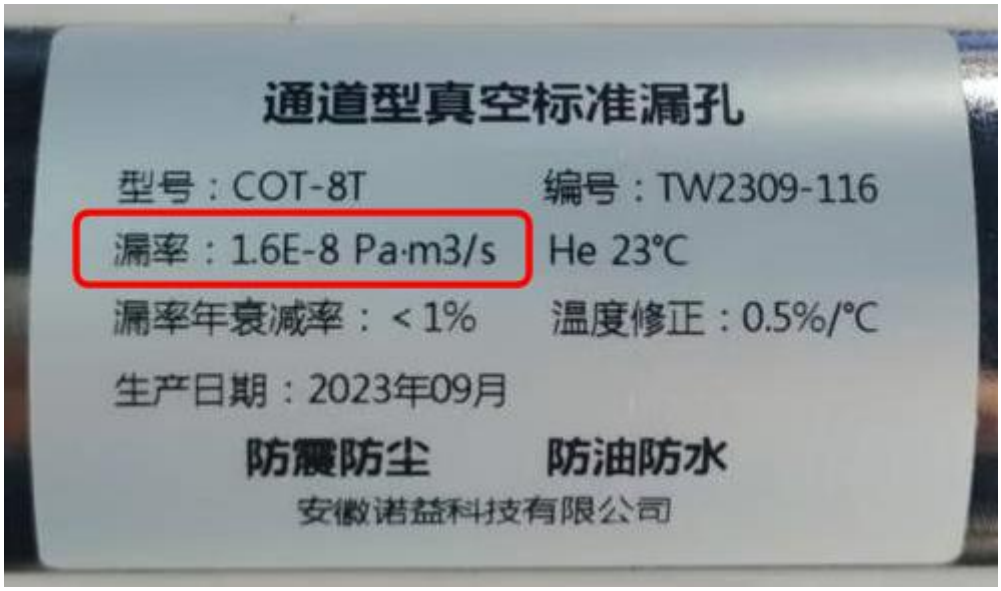

Fig.41 nameplate of the leak

1.8 Click on 'Vacuum CAL Start', and the instrument will automatically enter calibration mode. After about 120 seconds, calibration is completed, and the instrument will enter standby mode.

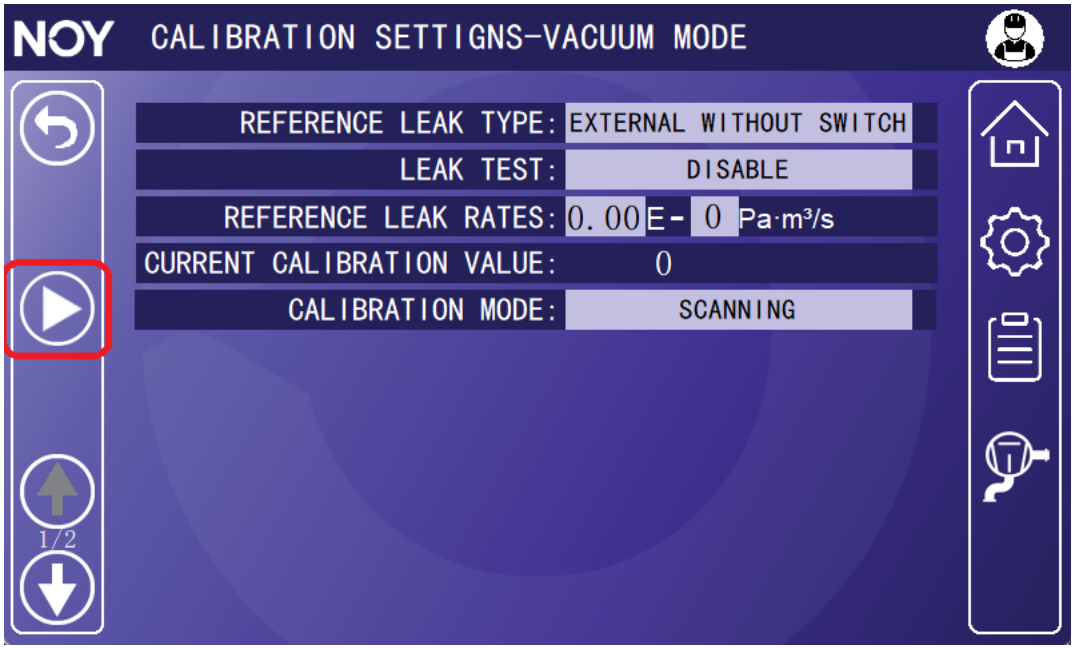

Fig.42 Calibration Settings interface

2. Internal calibration

To perform internal calibration, the instrument needs to be equipped with standard leakage holes inside, and the internal leakage nameplate is generally adjacent to the instrument nameplate.

2.1 Check if the leak detection mode in the "Leak Settings" is "Vacuum Mode".

2.2 Enter the "calibration settings" in the settings interface.

2.3 Set the "Calibration Leak Type" to "Built in" and the "Leak Hole Test" to "Disable".

2.4 Set the "Calibrated Leak Rate" to the leakage rate value on the nameplate of the leakage; Set the "calibration mode" to "scanning".

2.5 Click on "Vacuum CAL Start" and the instrument will automatically enter calibration mode. After about 120 seconds, calibration is completed and the instrument will enter standby mode.

3. Sniffer calibration

3.1 Prepare sniffers and standard leakage holes of no less than -7 levels.

3.2 Check if the leak detection mode in the "Leak Settings" is "Sniffer".

3.3 Enter the "calibration settings" in the settings interface.

3.4 Set the "Calibration Leak Rate" to the leakage rate on the leakage label.

3.5 Connect the sniffer to the leak detection port and open the standard leak hole.

3.6 Click on "Start Sniffer Calibration".

3.7 Place the sniffer probe into the open standard leak port.

3.8 Observe the "Current Signal" in the upper right corner of the display screen, and after the signal value stabilizes, click on "Collect Signal" in the lower right corner of the display screen.

3.9 After clicking "Collect Signal", the display screen will switch to the "Collect Background" interface.

3.10 Move the sniffer probe away from the standard leak port and place it in the air.

3.11 Observe the "Current Signal" in the upper right corner of the display screen. After the signal value stabilizes, click on "Collect Background" in the lower right corner of the display screen.

3.12 After clicking "Collect Background", the display screen will show the "Standby" interface, and the sniffer calibration will be completed.

The process of calibrating PPM units is the same as that of sniffers, as long as the leakage rate unit is changed to "PPM" and the calibrated leakage rate value is changed to 1E+2 (100PPM) or 5E+1 (50PPM) according to the standard gas

Section 7 Common leak detection methods

There are multiple detection methods for using helium as an exploration gas. The detection method is usually determined based on the actual working conditions of the tested object. It is recommended to maintain the same pressure difference and usage method as the actual use of the test piece during testing. For example, vacuum objects should be tested in a vacuum environment, and pressure tanks should be tested while the tank is pressurized.

1. Negative pressure detection

Negative pressure detection is the process of using a vacuum pump or leak detector to evacuate the interior of the object being tested. When a certain pressure is reached, the leak detector controls its own valve and starts testing. Then test through the following methods:

1.1 Helium Spray Method

Use a pressure reducing valve or flow meter to adjust the helium gas to a certain flow rate, connect the helium gas with a spray gun, and spray helium gas towards the suspected leak point on the tested part. Observe the display value of the leak detector to determine if there are any leakage points.

This method can find the location of the leakage point and the relative leakage rate.

1.2 Bell jar method

Cover the tested item with a plastic bag or bell jar. Then fill the plastic bag or bell jar with helium gas to

fill the area around the tested object with helium gas. Observe the display value of the leak detector for a certain period to determine the overall leakage rate of the tested component.

This method can test the overall leakage rate of the tested component.

2. Positive pressure detection

Positive pressure testing is the process of filling a certain amount of helium gas or a mixture of helium and nitrogen gas into the interior of the tested object. Use inhalation method or bell jar method again to test the leakage point or leakage rate of the tested object.

2.1 Inhalation method

Install a dedicated helium suction probe at the leak detection port of the leak detector and then use the probe to detect helium at the suspected leak point of the tested object. Observe the display value of the leak detector while detecting to determine the leakage point of the tested component.

This method can detect the leakage point position and relative leakage rate of the detected component.

2.2 Bell jar method

Inject helium gas or a mixture of helium and nitrogen gas at a certain pressure into the interior of the tested object. Cover the tested item with a bell jar and use a leak detector to evacuate the bell jar. The helium gas leaked from the inside of the tested object will be detected by a leak detector and the leakage rate will be

quantified.

This method can detect the overall leakage rate of the tested item.

3. Inside-out testing method

The inside-out testing method is mainly aimed at electronic components or some small-sized workpieces. The inside-out testing method for leak detection is somewhat like the bell jar method in negative pressure.

Firstly, the tested object needs to be placed into a helium pressure tank of a certain volume, and then a certain pressure of helium gas needs to be injected into the helium pressure tank and held for a period. After removing the tested part, the residual helium gas on the surface of the tested part should be removed, and then the tested part should be placed in a bell jar or leak detection tank for leak detection testing. After a certain period, the displayed value of the leak detector should be read, which is the leakage rate of the tested part.

Refer to: QJ3212-2005《Test methods for leaks using the helium mass spectrometer leak detector in the inside-out testing method》

Section 8 Maintenance and upkeep of instruments

1. Power on test

When the leak detector is not in use for a long time, it is required to conduct a power on test every month, and after 2 hours of power on, recalibrate and calibrate it.

2. Molecular pump maintenance

Molecular pumps are precision machinery, so please handle them with care and keep the inside of the pump body clean during transportation. If the molecular pump malfunctions due to the entry of foreign objects inside, our company will not bear the consequences.

For the maintenance of molecules, please contact our after-sales personnel in a timely manner. If any unauthorized disassembly is found, our company will not bear the consequences.

3. Maintenance of vacuum pipelines

After prolonged use of the leak detector, various components of the vacuum pipeline may have stains and need to be disassembled and cleaned; Each sealing ring may age or wear out and needs to be disassembled for cleaning or replacement. The maintenance or upkeep of leak detectors requires strict attention to the following matters compared to general vacuum equipment:

Caution

It is strictly prohibited to use vacuum grease or silicone oil inside the vacuum pipeline.

Please wear powder free rubber gloves to prevent dust or skincare oil from adhering to the surface of vacuum components. It is recommended not to use vacuum grease. Vacuum grease can absorb the test gas He and slowly release He during the testing process, causing helium contamination.

If you must use vacuum grease, please use a small amount of genuine product.

3.1 Valve seat and solenoid valve maintenance

（1）The internal cleaning of the valve seat requires ultrasonic cleaning machine. Please contact our after-sales personnel for assistance.

（2）Cleaning of solenoid valve

Disassemble the solenoid valve, wipe off the oil stains on the metal surface with a 95% alcohol dust-free cloth, and clean or replace the sealing ring with 95% alcohol (if deformed). Only after cleaning it completely or drying it in an oven temperature ≤ 80 ℃ can it be used.

3.2 Care of O-ring seals

When removing, inspecting, or replacing O-ring seals, please note the following:

Notice

It is recommended to replace all O-ring seals when removing them during daily maintenance or upkeep.

(1) When removing the O-ring, be careful with your fingers and do not use metal tools to avoid scratching the sealing surface of the O-ring.

(2) Before installation, use a dust-free cloth or lint free cloth to wipe the surface of the O-ring seal clean to prevent foreign objects from affecting the seal.

(3) It is strictly prohibited to apply vacuum grease or other substances on the surface of the O-ring seal.

4. Maintenance of mechanical pumps

4.1 Oil

Normal oil is clean and transparent. If the oil color becomes dark, it needs to be replaced with new oil. If there is gas or liquid dissolved in the oil, it will affect the maximum pressure of the pump. It can be continuously operated for 30 minutes with the inlet closed and the gas damper open for degassing.

4.2 Change the oil

It is recommended to change the oil of the pump after the first 100 hours of operation. In the future, when extracting clean gas under low pressure, replace the oil every 2000 hours; But if you remove contaminated or corrosive process gases, or operate at high inlet pressures or temperatures, please determine the frequency of oil change based on your specific operating conditions.

Tool required: 8mm hex wrench.

Turn off the power to the pump and change the oil while the pump oil is still warm. Remove the drain plug and place the used oil into a suitable container. When the flow of oil slows down, tighten the drain plug, briefly turn on the pump (up to 10 seconds), then turn off the power and remove the drain plug to empty the remaining oil.

Screw on the oil drain valve (check the gasket, replace if damaged).

Suggestion: If conditions permit, before injecting new oil into the pump, please add about 100ml of new oil into the inlet while the pump is running, and briefly open and close the inlet 2-3 times (with an interval of 2 seconds) to achieve the purpose of flushing the pump chamber, and then release the oil that has flushed the pump chamber. The frequency of flushing depends on the cleanliness of the oil released after flushing. Finally, inject an appropriate amount of new oil.

5. Standard maintenance spare parts list

Number	Material name	Specifications	Quantity
1	O-ring	DN25 KF	1
2	Quick release flange	DN25 KF	1
3	pump oil	LVO 100	1
4	ion source		1
5	Main control board		1
6	Ion source power board		1
7	Electromagnetic valve drive board		1
8	Fan	12038 24v	1
9	Switching Mode Power Supply	LRS-350-24	1

6. Common fault analysis and handling

Category	Fault phenomenon	Inspection and analysis methods
Power Supply	The leak detector does not run after startup	Does the power socket have AC 220V. Is the power cord connected properly. Does the power switch output 220V. Is the fuse burnt out.
	No display after startup	Check if the touch screen connection cable is loose.
Fan	The fan is not turning	Check if the fan plug is loose. Check if the fan socket has 24V. Check if the fan is functioning properly.
Backing Pump	After startup, there is a picture on the display screen, and the backing pump does not start.	Check if the mechanical pump switch is turned on. Check if the power cord of the mechanical pump is reliably connected.
	The sound of the mechanical pump is abnormal.	Check the connecting clamps of the mechanical pump. Check if the leak detection port is sealed. Check if the protective cover of the mechanical pump fan is deformed. Check if the oil level of the mechanical pump is too low. Check for any major leaks. Check if the mechanical pump oil has solidified.

molecular pump	Molecular pump abnormality	Check if the output value of the exhaust pipe gauge is correct. Check the power supply of the molecular pump. Check the signal line of the molecular pump. Check if all interfaces of the molecular pump are properly connected.
display	Display error, no display	Check if the power and signal lines of the display screen are normal.
Leak detection port vacuum	The vacuum at the leak detection port does not meet the detection requirements	Check if the vacuum output of the leak detection port is correct. Check if the leak detection port is sealed.
ion source	The filament is not powered	Check if the molecular pump has been fully started. Check if the ion source socket is loose.
	Repeatedly powering up the ion source	Check if the wire sequence of the ion source socket is incorrect. Check if the pins of the ion source are connected or disconnected.
key	The button does not work	Check if the buttons are damaged. Check if the button wires are connected. Check if any buttons are continuously pressed.
	The instrument keeps chirping	

7. Analysis and Handling of Common Errors and Warning Codes

7.1 Common Error Codes, Analysis, and Handling

Error code	Meaning	reason	Check and exclude
10	Abnormal pressure at the leak detection port	The signal line of the vacuum gauge at the leak detection port has fallen off or has poor contact; The vacuum gauge at the leak detection port is damaged or contaminated.	Check the vacuum gauge wiring harness; Replace or clean the vacuum gauge.
13	Abnormal vacuum in the front stage of the molecular pump	The backing pump of the leak detector is not working properly. The vacuum gauge at the exhaust port of the molecular pump is damaged or contaminated. The exhaust valve of the molecular pump is not properly opened	Check if the backing pump is working properly. Replace the vacuum gauge. Check if the vacuum valve is open.
16	Molecular pump startup timeout	The backing pump is not working properly; The molecular pump is not working properly; The molecular pump is in an incorrect state.	Check if the backing pump and evacuation valve are working properly. Check if the molecular pump is functioning properly. Shut down for 30 minutes and wait for the molecular pump error status to clear before restarting.
20	Abnormal high voltage of ion source anode	Ion source damage. The filament drive board is damaged. Poor contact of ion source power supply harness.	Switch the filament or replace the ion source. Repair and replace the filament drive board. Repair and replace the ion source power supply harness.

21	Low emission current	Atmospheric intrusion. The filament is aging or damaged. The filament drive board is damaged. Poor contact of ion source power supply harness.	Check parameters to avoid atmospheric intrusion. Repair and replace the ion source. Repair and replace the filament drive board. Repair and replace the ion source power supply harness.
22	High emission current	Atmospheric intrusion. The filament is aging or damaged. The filament drive board is damaged. Poor contact of ion source power supply harness.	Check parameters to avoid atmospheric intrusion. Repair and replace the ion source. Repair and replace the filament drive board. Repair and replace the ion source power supply harness.
23	Abnormal power supply of filament board	The filament drive board is damaged	Repair and replace the filament drive board
24	Abnormal 80V power supply for filament board	The filament drive board is damaged	Repair and replace the filament drive board
26	Molecular pump communication failure	Poor contact of molecular pump communication harness. The molecular pump controller is abnormal.	Repair and replace the communication harness of the molecular pump. Repair and replace the molecular pump controller.
27	Molecular pump communication timeout	Poor contact of molecular pump communication harness. The molecular pump controller is abnormal.	Repair and replace the communication harness of the molecular pump. Repair and replace the molecular pump controller.
36	Low rotational speed of molecular pump	Atmospheric intrusion. Molecular pump alarm error. High ambient temperature, molecular pump overheating.	Check parameters to avoid atmospheric intrusion. Check if the molecular pump and controller are functioning properly;

		Vacuum pipeline leakage or pre stage vacuum difference.	Check the front stage vacuum pump. Check if the ventilation and heat dissipation are normal.
37	Molecular pump malfunction (Red light on)	Atmospheric intrusion. Molecular pump or controller damaged. High ambient temperature, molecular pump overheating. Vacuum pipeline leakage or pre stage vacuum difference.	Check parameters to avoid atmospheric intrusion. Check if the molecular pump and controller are functioning properly; Check the front stage vacuum pump. Check if the ventilation and heat dissipation are normal.
38	Molecular pump malfunction (Yellow light on)	Atmospheric intrusion. Molecular pump or controller damaged. High ambient temperature, molecular pump overheating. Vacuum pipeline leakage or pre stage vacuum difference.	Check parameters to avoid atmospheric intrusion. Check if the molecular pump and controller are functioning properly; Check the front stage vacuum pump. Check if the ventilation and heat dissipation are normal.
39	High pressure at the exhaust port of the molecular pump	Atmospheric intrusion. Vacuum pipeline leakage or pre stage vacuum difference. The vacuum gauge at the exhaust port of the molecular pump is damaged.	Check parameters to avoid atmospheric intrusion. Check the front stage vacuum pump. Repair and replace the vacuum gauge at the exhaust port of the molecular pump.
40	During standby, the pressure at the exhaust port of the molecular pump is high	Vacuum pipeline leakage or pre stage vacuum difference. The vacuum gauge at the exhaust port of the molecular pump is damaged.	Check the front stage vacuum pump. Repair and replace the vacuum gauge at the exhaust port of the molecular pump.

50	Abnormal deceleration of molecular pump	Atmospheric intrusion. Molecular pump alarm error. High ambient temperature, molecular pump overheating. Vacuum pipeline leakage or pre stage vacuum difference.	Check parameters to avoid atmospheric intrusion. Check if the molecular pump and controller are functioning properly; Check the front stage vacuum pump. Check if the ventilation and heat dissipation are normal.
211/212	Low emission current caused by sudden pressure changes at the leak detection port	Atmospheric intrusion	Check parameters to avoid atmospheric intrusion. Check if the valve opening logic and leak detection valve are functioning properly.
221/222	High emission current caused by sudden pressure changes at the leak detection port	Atmospheric intrusion	Check parameters to avoid atmospheric intrusion. Check if the valve opening logic and leak detection valve are functioning properly.

7.2 Common Warning Codes, Analysis, and Handling

Warning code	Meaning	Reason	Check and exclude
1	When calibrating the sniffer mode, the background is abnormal.	Low background value collected during calibration.	Is the suction gun blocked.
2	The difference between the calibration signal of the sniffer and the background is small.	The helium background in the environment is too high, or the standard leakage fails and the filament ages.	Wait for the background in the environment to decrease before calibrating.

3	The calibration signal of the sniffer is less than the background value.	The helium background in the environment is too high, or the standard leakage fails and the filament ages.	Wait for the background in the environment to decrease before calibrating.
4	The calibration signal is abnormally large	Is the leakage connection normal; Leakage failure and filament aging.	Check for standard leak connections; Re calibrate;
5	The calibration signal is abnormally small	Standard leakage failure and filament aging.	Replace standard leakage holes; Re calibrate;
6	Abnormal exhaust port of molecular pump during leak detection	Leakage inside the solenoid valve or poor vacuum degree at the leak detection port.	Check the connection between the leak detection port and the vacuum pipeline.
7	The helium background signal is abnormally large	The helium background in the environment is too high.	Wait for the background in the environment to decrease before calibrating.
8	Abnormal calibration signal	Is the leakage connection normal; Leakage failure and filament aging.	Check for standard leak connections; Re calibrate;
9	Large leakage protection	The pressure at the leak detection port suddenly increases.	Check if the vacuum pipeline of the leak detection port is abnormal.
10	time out for pump-down time	The vacuum degree of the leak detection port cannot reach the working pressure	Check if the vacuum pipeline of the leak detection port is blocked.
11	Sniffer blockage	The pressure at the leak detection port is too low	Check the sniffer filter
12	Sniffer leakage	The pressure at the leak detection port is too high	Check if the connections of the sniffer are damaged .

Explanation: If the fault cannot be resolved, please contact our after-sales personnel.

Section 9 Communication Protocol

The instrument has one RS485 and two RS232 interfaces, supporting standard Modbus protocol and multiple proprietary communication protocols.

The following is NOY protocol 3 in our own agreement.

❖ Protocol format

COMMAND <CR>

PARAMETER n1 n2 n3 …. <CR>

<CR>indicates carriage return, HEX value 0X0D, all data is in ASCII format

❖ Read leakage rate and status instructions

LR<CR>,G4<CR>

Return data format: LR=1.00E-09 MEAS<CR>

LR=1.00E-09 represents leakage rate

There is a space behind it, and the data after the space may be:

MEAS: The current leak detector is in leak detection mode

STBY: The current leak detector is in standby mode

CALI: The current leak detector is in calibration state

ACCL: The current leak detector is in the startup state

ERRO: The current leak detector is in an error state

TSTC: The current leak detector is in the testing leak state

❖ Zero adjustment command for leak detector

ZERO ON<CR>

Return data format: OK<CR>

After successful zeroing, the leak detector responds

❖ Cancel the zero adjustment command of the leak detector

ZERO OFF<CR>

Return data format: OK<CR>

After successfully canceling the zero adjustment, the leak detector responds

❖ Read leakage rate instruction

G1<CR>

Return data format: 1.00E-09 <CR>

1.00E-09 represents leakage rate

❖ Read status instructions

S1<CR>

Return data format: MEAS<CR>

MEAS: The leak detector is in leak detection mode

STBY: The leak detector is in standby mode

CALI: The leak detector is in calibration state

ACCL: The leak detector is in the starting state

ERRO: The leak detector is in an incorrect state

STOP: The leak detector is in a paused state

❖ Leak detector starts leak detection command

START<CR>

Return data format: OK<CR>

Return data list

OK: The leak detection instruction has been successfully executed

E1: The start command is invalid, and the leak detector is not in standby mode

❖ Stop leak detection command for leak detector

STOP<CR>

Return data format: OK<CR>

Return data list

OOK: Stop leak detection instruction execution successful

E1: Stop command is invalid, leak detector is not in leak detection state

❖ Read the current leak detection port pressure command

G3<CR>

Return data format, 1.0E-5<CR>

1.0E-5represents the current vacuum level value

❖ Read leakage rate unit instruction

G5<CR>

Return data format, 1<CR>

0=Pa.m^3/S

1=mbar.l/s

2=atm.cc/s

❖ Read the vacuum unit instruction

G6<CR>

Return data format, 1<CR>

0=mbar

1=Pa

2=atm

Section 10 Services

1. Installation service

1.1 Provide free on-site installation and debugging services for sold leak detectors.

1.2 After on-site installation and debugging, technicians will provide free technical training to the customer's leak detector operators.

2. After sales service

1.1 After the leak detector is sold, the warranty period is one year from the date of shipment. During the warranty period, our company provides free repairs for any malfunctions caused by the correct use of the leak detector (excluding consumables such as sealing rings and ion sources).

1.2 Our company implements lifelong maintenance for products to relieve users' worries.

3. Contact Information

Anhui Nuoyi Technology Co., Ltd

Building 14-2, Liandong U Valley International Enterprise Port, Zhenxing Road, Shushan District, Hefei City, Anhui Province, China

Unified Hotline: +86-400-167-7880

After sales hotline: +86-181-5421-7458

Part of Atlas Copco Group

Unified Hotline: +86-400-167-7880
Https: www.noytechnology.com
Email: noy@ noytechnology.com
Address: Building 14-2, Liandong U Valley International Enterprise Port, Zhenxing Road, Shushan District, Hefei City, Anhui Province, China

Leak Detection
Solution Provider